GROSS ENGINEERING LLC

Design for Today & Innovate for Tomorrow

AutoDrive

Operation Manual

Rev A

Gross Engineering LLC · 301 Stag Industrial Ln · Lake St. Louis, Missouri

© Gross Engineering LLC. All rights reserved. This document contains confidential and proprietary information. Do not distribute, reproduce, or share without written permission.

Contents

Contents 2
1. Overview 5
    Supported Configurations 5
    What This Manual Assumes 5
    What It Does Not Cover 5
    How Configuration Differences Are Marked 6
2. Important Safety Information 6
    General Safety 6
    Who Should Operate This System 6
    The E-Stop 6
    Operating Environment 7
    Warnings 7
    Liability Disclaimer 7
3. The Settings Menu 8
    3.1 Opening the Settings Menu 9
    3.2 What the Stored Positions Actually Mean 10
    3.3 Stroke 11
        When to relearn it 11
        How to relearn it 11
    3.4 Index Position 12
        How to set it 12
        Tuning it 12
        Under-indexing and over-indexing 13
    3.5 Controlled Seat Position 13
        How to set it 13
        Tuning it 14
    3.6 Clutch Values 14
        How to set it 14
        Tuning it 14
    3.7 Manuals, Software, and Support 15
4. Manual Jog 16
    4.1 Opening Manual Jog 16
    4.2 Step Sizes 17
    4.3 Top Home and Seat Home 17
    4.4 Terminate Run 18
    4.5 Common Uses 18
5. Semi-Automatic Mode 19
    5.1 The Semi-Automatic Screen 19
    5.2 Moving Between Positions 20
    5.3 Single and Dual Cycle 21
    5.4 Working in This Menu 21
6. Sensors 22
    6.1 How the Sensor Menus Are Organized 22

6.2 The Sensor Menu 22
Reading the port status 23
Getting to the other screens 23
6.3 The Sensor Configurator 24
Choosing tool head up or down 25
Sensing logic and the output readout 25
6.4 Assigning a Sensor to a Port 25
Available sensors 26
6.5 Setting Up a Sensor — Worked Example 27
What you are trying to catch 28
Wire the sensor 28
Assign the sensor 28
Set when it reads 28
Set the logic and the height 28
Save it 29
6.6 Sensor Wiring and Building Your Own 29
Which generation of control board you have 29
Wiring convention 30
Molex ports 30
Retrofitting Mark 7 sensors to a predecessor board 31
Building your own sensor 32
6.7 Prox Setup & Debug 33
Verifying the sensors 33
Running a stability test 33
6.8 When a Sensor Trips During a Run 34
7. Automatic Mode 35
7.1 Starting a Run 35
Run values 35
7.2 The Run Screen 36
Reading the screen 37
How a cycle is counted 37
Run, Pause, and Back 38
7.3 The First Cycles — Self-Tuning 38
What it is tuning for 38
What a settled run looks like 38
7.4 Reading the Sensor Indicators 39
7.5 When to Use the Run Adjustments 39
Index Speed 39
Control Seat 39
Single Stage 40
Sensor toggles 40
The live readouts 40
7.6 Stopping the Machine 41
7.7 Errors and Recovery 41
Resetting the E-Stop 41
Soft errors 41

Hard errors 41
Getting out of a hard error 42
Returning to operation 42
7.8 Seat / Top Position Error 42
8. Maintenance 43
8.1 Keep the Machine Clean 43
8.2 Fastener and Alignment Check 43
8.3 Gearbox Oil 44
8.4 Keys and Keyways 44
8.5 The Proximity Flag 44
8.6 Changing the Gearbox Ratio 44
Sourcing a gearbox 45
After a ratio change 46
9. Troubleshooting 46
9.1 Software and Controller 47
9.2 AutoDrive 48
Motion and direction 48
Stepper driver terminal reference 48
Stepper driver LED reference 48
Seat fails 49
Setting the clutch when you are getting fails 50
Walking 50
Nothing moves, but no error appears 50
9.3 The Press 51
9.4 The Reloading Process 52
The first rounds of a run are not representative 52
Die balance across the tool head 52
10. Software Updates 53
10.1 Where Updates Come From 53
10.2 Check Your Versions First 53
10.3 Downloading and Extracting the Update 53
10.4 Updating the Main Board 54
10.5 Updating the Touchscreen 55
Using a card larger than 32 GB 56
10.6 If an Update Makes Things Worse 57
11. Support 58
Where to Go Next 58

1. Overview

This manual covers running your AutoDrive system: the touchscreen and its menus, the learned positions that define how the press moves, the sensors, and the run and load cycle.

It applies to every AutoDrive configuration. The touchscreen, control box, and software are the same across all of them, so the operating procedure is the same regardless of which press you own. Where a configuration behaves differently, that difference is called out in place.

Supported Configurations

Configuration	Press
APEX10	Mark 7 Apex 10
FA10	Frankford Arsenal X10
RL1100 / CP2000	Dillon RL1050, RL1100, CP2000
SP1050	Dillon Super 1050

What This Manual Assumes

Your system is assembled, wired, and commissioned. The stroke is learned, both proximity sensors are set, and the index and controlled seat positions are stored.

If any of that is not done, stop and complete Section 7 of your configuration's Quick Start Guide first. This manual will not work correctly on an uncommissioned machine.

> **Coming back after a while —** If your machine is already commissioned but you no longer remember what a setting does or why you would change it, start at Section 3. It covers each stored position, what it physically controls, and how to reset or refine it without repeating the full commissioning process.

What It Does Not Cover

- **Mechanical assembly, wiring, and first power-on** — your configuration's Quick Start Guide.
- **Physical proximity sensor placement** — Section 7 of your configuration's Quick Start Guide.
- **Software and touchscreen updates** — AutoDrive Software Update Guide.
- **Die setup and load development** — outside the scope of AutoDrive documentation. Refer to your press manufacturer and your load data.

How Configuration Differences Are Marked

Anything written without a configuration name applies to all machines. Where behavior differs, the callout leads with the configuration it applies to:

> **SP1050 —** [example difference]

Longer configuration-specific procedures live in Appendix A — Configuration Notes, and are cross-referenced from the section they belong to.

> ⚠ **The machine moves under power —** AutoDrive can start motion at any time power is applied. Section 2 is the same safety information you read during installation. Read it again before operating.

2. Important Safety Information

Read this section in full before operating the system.

General Safety

This system is a powerful mechanical device capable of sudden, forceful movement. Automation increases speed and consistency, but it also increases the consequences of a mistake. It does not make reloading inherently safer.

Who Should Operate This System

This system is intended only for responsible adults who will:

- Stay focused and present while the machine is running.
- Stop the system immediately if anything looks, sounds, or feels wrong.
- Use sound judgment during installation, adjustment, and operation.

> ⚠ **Do not operate —** Do not operate this system if you are distracted, impaired, fatigued, or unsure how the machine works.

The E-Stop

> ⚠ **The E-Stop is active at all times, in every mode —** Manual Jog, Semi-Automatic, and Automatic. Pressing it de-energizes the motor and notifies the system, which registers the de-energized state as a logic output. There is no screen and no operation where the E-Stop is bypassed or unavailable.

Keep it within reach whenever the machine is powered. It is the one control that works the same way no matter what the machine is doing.

To reset it, twist clockwise to release and wait one to two seconds for the system to reinitialize. An error message will appear identifying the condition — see Section 7.7.

Operating Environment

- Never allow children or untrained individuals to operate the system, or to be near it while it is powered.
- Always assume the machine can move whenever power is applied.
- If you are unsure about any step, stop and reassess before continuing.

Warnings

> ⚠ **Moving parts —** Unexpected motion, pinch points, rotating components, and stored energy can cause severe injury or damage. Keep hands, tools, clothing, and loose items clear of all moving components at all times.
>
> ⚠ **Never run unattended —** Never operate the system unattended. Never bypass guards, safety devices, or emergency stop functions.

Liability Disclaimer

AutoDrive is manufactured by Gross Engineering LLC. Gross Engineering LLC does not manufacture, design, or supply the reloading press to which AutoDrive is installed. The press is a separate product from a separate manufacturer, and its design, construction, guarding, and safety features are the responsibility of that manufacturer.

AutoDrive automates the motion of the press. It does not alter the reloading process itself. The hazards inherent to reloading ammunition — including primer detonation, powder ignition, case failure, and the handling of energetic materials — exist independently of AutoDrive and are present whether the press is operated manually or under automation. Gross Engineering LLC assumes no liability for these hazards.

AutoDrive has been designed and constructed in line with current industrial wiring and machine safety practice, to the best of our engineering ability.

Guarding and pinch points. The press has moving components, including tool head travel, that may not be guarded by the press manufacturer. AutoDrive does not add guarding to the press and does not eliminate these hazards. Automation can make them more consequential: an automated press moves without a hand on the handle, and it may move at any time power is applied. It is your responsibility to identify pinch points on your press, keep clear of them during operation, and provide any additional guarding your installation requires.

By installing and using AutoDrive, you acknowledge that you are solely responsible for its safe installation, setup, adjustment, and operation, and that you assume all associated risks.

Gross Engineering LLC is not liable for injury, death, or property damage resulting from: the design or condition of the press; misuse; improper installation; unsafe operation; bypassing safety features; ignoring warnings; user modifications; third-party components; or unsupported configurations.

3. The Settings Menu

Everything the machine knows about your press lives here. The stroke it travels, where it indexes, where it seats a primer, and how far out of position it will drift before it stops.

These values are stored. You set them once at commissioning and the machine keeps them through power cycles. You come back to this menu when something physical changes — a moved sensor, a new tool head, a caliber change — or when the machine is running but not running *well*.

This section covers what each value means, when it needs to change, and how to change it.

> ⚠ **The press will move while you are in this menu —** Setting a position means jogging the machine to it while you are standing next to it. Know where your hands are before every jog, and keep the E-Stop within reach.

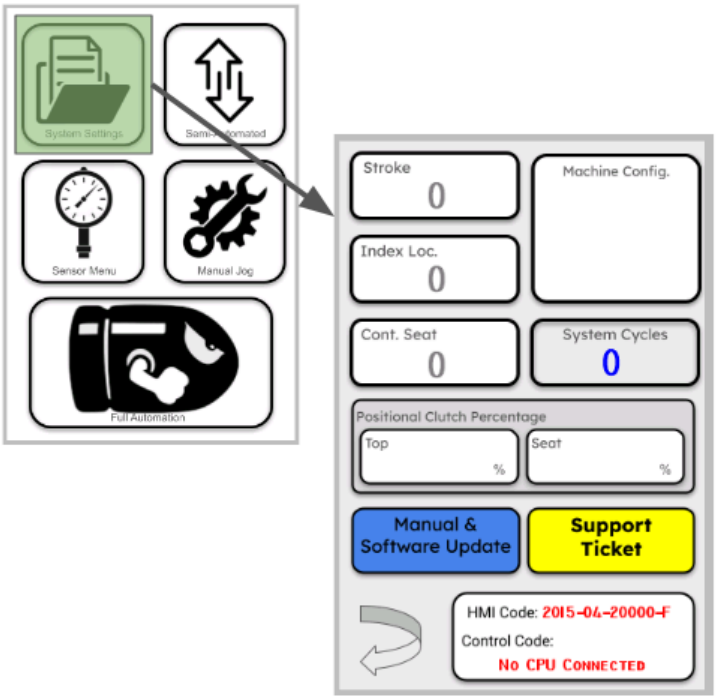

[Figure 3a — Settings menu, full screen, all buttons and text boxes visible]

3.1 Opening the Settings Menu

From the home screen, press **Settings**.

Every control on this screen is pressable. The text boxes display a stored value and press like a button — touching one starts the procedure that sets it. Nothing on this screen is display-only except the version information in the lower corner.

Key	Control	What Happens When You Press It
A	Stroke	The machine measures its own travel and stores the result. See Section 3.3.
B	Index Loc	Takes you to Manual Jog to set where the shell plate advances. See Section 3.4.
C	Cont. Seat	Takes you to Manual Jog to set the controlled seat position. See Section 3.5.
D	Clutch — Top	Opens the keypad to set the top jam-protection threshold. See Section 3.6.
E	Clutch — Bottom	Opens the keypad to set the bottom jam-protection threshold. See Section 3.6.
F	Manuals & Software	Opens the documentation and software menu. See Section 3.7.
G	Support Ticket	Opens the support menu. See Section 3.7.
H	Machine Configuration	Reserved for a future release. Not active in current software.
I	Version information	Displays the active HMI configuration and version, and the main board software version.
J	Back Arrow	Returns to the home screen.

> **Keys refer to Figure 3.1a —** Each letter marks the matching control on the screen capture below.
>
> **Clutch is two separate values —** The clutch has its own text box for each end of the motion, top and bottom. They are set independently and do not have to match.
>
> **Version information —** The lower right corner of the Settings menu displays two version numbers: the HMI configuration currently in use, and the software version running on the main board. These are the two things a software release refers to. Compare them against the latest release before updating anything (Section 10.2), and have both ready when you contact support.

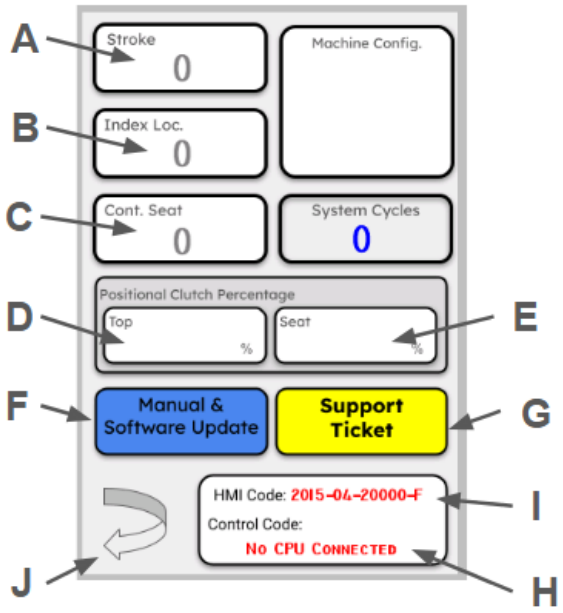

[Figure 3.1a — Settings menu, full screen, with each control marked A through J to match the table above]

> **Machine Configuration —** The button in the upper corner is reserved for a future release. It is not active in the current software and does nothing when pressed.

3.2 What the Stored Positions Actually Mean

Before changing any of them, it helps to know what you are describing to the machine.

The press moves in a single vertical stroke, top to bottom and back. AutoDrive does not know that stroke by design — it learns it from your machine, and then it uses that learned travel as the reference for everything else.

Position	What It Controls	When You Touch It
Stroke	Total travel between the top and bottom proximity sensors	Only when the physical machine changes — a moved sensor, an adjusted flag, or something that came loose
Index Loc	Where in the stroke the shell plate begins to advance	Whenever you want to. Taught once, then refined as you learn the machine
Cont. Seat	Where the controlled portion of the stroke begins	Whenever you want to. Depends heavily on what your tool head is doing
Clutch	How far out of position the press may drift before stopping	When you get nuisance stops, or when the press drives into a jam before stopping

Two of these are set-and-forget, two are not — Stroke is a measurement. It is correct or it is not, and you only relearn it when the physical machine changes. Index and controlled seat are preferences. They are taught at commissioning to get you running, and most users refine them over the following weeks as they get comfortable with the machine and start noticing nuances in how their particular setup behaves. Changing them is normal, not a sign something is wrong.

They are related, not independent — Stroke is the reference for the other three. Relearning the stroke does not erase your index and seat positions, but it does change what they mean relative to the travel. Recheck both after any stroke relearn.

⚠ **If you moved a proximity sensor, stop here —** The stored positions assume the proximity sensors are where commissioning left them. If either sensor has been loosened, slid, rotated on its threads, or removed, set it physically first — see Section 7 of your configuration's Quick Start Guide — then come back and relearn the stroke. Learning a stroke against a misplaced sensor stores a wrong reference for everything else.

3.3 Stroke

The stroke is the machine's measurement of its own travel: the distance between where the top proximity sensor stops it and where the bottom proximity sensor stops it.

When to relearn it

Relearn the stroke whenever the physical ends of the travel change:

- You moved, replaced, or re-seated either proximity sensor.
- You adjusted the proximity flag.
- You changed the hard stops.
- Something came loose or the machine has drifted from where it was.
- Every stored value on the screen reads 0.

Tuning your travel — Relearning is not only a repair. If you want more travel at the top — to get a cleaner index, or more clearance — back the top sensor off or adjust the flag, then relearn. The same applies at the bottom. The stroke is how you tell the machine you have changed its limits.

What does not require a relearn — Caliber changes and tool head swaps do not. The stroke is a property of the press and the sensors, not of what is mounted in the tool head. Routine operation does not require relearning either.

How to relearn it

⚠ **Empty the press first —** Remove all cases before learning the stroke.

1. From the home screen, go to **Settings**.
2. Press the **Stroke** text box to begin learning.
3. The press moves to the top position, travels down to the bottom to measure the stroke, then returns to the top to confirm it.
4. The learned value populates the text box and saves automatically.

Watch the whole cycle — Stay with the machine while it learns. It is making three full moves under power, and a sensor that is loose or intermittent will show itself here before it shows itself in production.

> ⚠ **If every value reads 0, including the stroke —** The touchscreen is not communicating with the control box. Power cycle the machine. If the values are still 0 after a restart, this is almost always a loose or unseated connection rather than a failed component — work through Section 9.1 — Software and Controller before contacting us. Contact Gross Engineering if the values are still 0 after that.

3.4 Index Position

This is the point in the stroke where the shell plate begins to index — where it starts shifting to the next position.

It is exactly what it sounds like, and it does not need to be exact. There is a workable range rather than a single correct value, so set it close and refine it later if you want to.

How to set it

1. Go to **Settings** and press **Index Loc**. The screen moves to the Manual Jog screen.
2. Jog up or down, reducing step size as you close in, until you reach the point where indexing should occur. Listen for the audible click of the index pawl reset.
3. Press **Seat Home**. The press cycles, returns to the position you set, and returns you to the Settings menu.
4. Repeat until the position is right.

Press **Terminate Run** at any point to abort without storing.

> **This one does not need to be exact —** Set indexing where you want it to happen. There is a workable range, not a single correct value.

Tuning it

Once it is set and the machine is running, these are the symptoms that send you back here:

What You See	What to Try
Shell plate has not finished advancing when the tool head starts down	Move the index point earlier in the stroke
Plate advances cleanly but cases scuff on die mouths	Move the index point earlier, then confirm the plate is fully seated at the top
Plate indexes late and the cycle feels rushed at the top	Move the index point earlier
Index is clean at low speed and inconsistent at high speed	This is usually not the index position — see Section 3.6 and the speed guidance in Section 5

> ⚠ **Do not adjust the press indexing pawl to compensate —** The index position is the correct adjustment point. Changing the pawl affects manual operation as well and makes the press harder to return to stock.

Under-indexing and over-indexing

> **APEX10 —** This subsection applies to the Mark 7 Apex 10, which has an adjustable indexing system. Other configurations do not.

The setting above controls *where* in the stroke the plate advances. It does not control *how far* the plate travels. If the shell plate is consistently stopping short of alignment or pushing past it, that is indexing travel, and it is fixed elsewhere.

The Apex 10 has a set screw on the indexing wheel. That set screw is not where you start.

Work in this order:

1. Adjust the top proximity sensor in or out. Indexing travel is driven by how far the press comes up, so the top of the stroke is the first place to look.
2. If you need finer control than the bracket gives you, use the micro-adjustment screw on the proximity flag.
3. Relearn the stroke — see Section 3.3. You have changed the top of the travel, so the stored stroke is now wrong.
4. Only if the plate still under- or over-travels, adjust the set screw on the indexing wheel.

> **Why this order —** The proximity sensor and flag are AutoDrive adjustments and are reversible. The indexing wheel set screw is a press adjustment, and it changes manual operation as well as automated operation. Exhaust the reversible options first.
>
> ⚠ **You are limited by available travel —** Sensor and flag adjustment can only move indexing as far as the press can physically come up. If you run out of travel before the plate indexes fully, the sensor is not the problem — the indexing wheel is where you go next.

3.5 Controlled Seat Position

This is where the controlled portion of the stroke begins.

It sits at the primer stage, which is why it is often thought of as the priming setting, but it is not limited to priming. Anything happening at that point in the stroke uses it — brass trimming, brass prep, or any other operation your tool head performs there. Set it for whatever work is actually being done, not for the name.

> **Set it for what your tool head does —** If you are trimming rather than priming, the right position is the one that suits the trimmer. The setting does not assume a primer is involved.

How to set it

1. Go to **Settings** and press the **Cont. Seat** text box. The screen progresses to the Manual Jog menu.
2. Jog to the point where the controlled portion of the stroke should begin. This can sit slightly before or slightly after contact — choose what works for your setup.
3. Press **Seat Home**. The press cycles and returns to the position you set.
4. Repeat until the position is right.

Press **Terminate Run** at any point to abort without storing.

Tuning it

> **N — still need this one.** Now that the section covers trimming and brass prep as well as priming, the tuning guidance probably splits: what a too-early or too-late position produces when priming, and the same when the tool head is doing something else. Give me the observable symptoms for each and I will write it.

3.6 Clutch Values

The clutch is the machine's jam protection. It defines how far out of position the press may drift before the system stops.

How to set it

1. Go to **Settings** and press the **Clutch Setup** text box.
2. Select the **Top** value and enter a whole number on the keypad. Start at 15%.
3. Repeat for the **Bottom** value.
4. Values save automatically.

> **Values above 100 —** A value greater than 100 is converted to a percentage of the learned stroke.

How the number behaves:

Direction	Effect
Lower value	Tighter. Less movement allowed before the system stops.
Higher value	More forgiving. More movement allowed before the system stops.

> **What the clutch does not do —** The clutch value is a percentage of allowed motion against the learned stroke. It does not add or reduce motor torque. A higher value lets the machine struggle longer before stopping; it does not make it stronger. The press will never drive past the proximity sensors regardless of clutch setting — those remain a hard stop.

Tuning it

Start at 15 top and bottom. Move in small steps and run the machine between changes — a clutch value that looks fine on one stroke will show its real behavior over a few hundred.

> **Watch the clutch work before you change it —** The semi-automatic screen displays live top and seat clutch readouts as the press cycles. Running a few cycles there and watching those readouts tells you more about whether your values suit the work than guessing at a number does. See Section 5.

What You See	What to Try
Machine stops on a clutch fault with no visible jam	Raise the value a few counts at a time
Machine stops on clutch faults only at higher speeds	Raise the value, or reduce speed — see Section 5
Machine drives into a genuine jam before stopping	Lower the value
Faults appear after a caliber or tool head change	Expected. Sizing effort changed. Re-tune rather than assuming a fault

> ⚠ **Do not raise the clutch to make a problem go away —** A clutch fault is the machine telling you it is meeting resistance it did not expect. Raising the value until the stops disappear does not fix the resistance, it just lets the press push harder into it. Find out what is binding first.

3.7 Manuals, Software, and Support

Two buttons on the Settings menu are utilities rather than machine settings. Both open their own menu and return you to Settings when you back out.

> **Manuals & Software —** Opens a menu with the full documentation and software set for your machine. The screen displays a **QR code** you can scan with a phone to reach the release page directly — useful if you do not have the link to hand.
>
> **Support Ticket —** Opens the support menu.
>
> **Check your versions first —** Before applying an update or opening a ticket, note the HMI configuration and main board software version from the lower right corner of the Settings menu. Both are the first thing support will ask for.

> **N — I have the navigation and the QR code, but not the rest of the contents.** What else does the Manuals & Software menu list? And for Support Ticket: does it send from the machine, or produce something the user emails in — and does it capture machine state like stroke, clutch values, or fault history automatically?

4. Manual Jog

Manual jog is how you move the press by hand — not with the handle, which is gone, but one controlled step at a time from the touchscreen.

It is a powerful screen. The same screen format is used for teaching the index and controlled seat positions, for tuning them afterward, for maintenance and debugging, and for error mitigation during an automated run. Whatever brought you here, the controls behave the same way.

That power comes with a condition attached.

> ⚠ **Clutch protection is deactivated on this screen —** Your clutch values do not apply while jogging. Nothing is watching for a jam and nothing will stop the press if it meets resistance. The machine is in its most powerful state here, and it will drive through whatever is in its way.
>
> ⚠ **Every press on this screen moves the machine —** There is no preview and no confirmation step. Know where your hands are before every jog, and keep the E-Stop within reach. The E-Stop is active on this screen as it is everywhere else — see Section 2.

4.1 Opening Manual Jog

From the home screen, press **Manual Jog**.

You also arrive here automatically when you press **Index Loc** or **Cont. Seat** in the Settings menu. The screen behaves the same either way — the difference is that when you arrive from Settings, the machine is waiting to store the position you jog to. See Sections 3.4 and 3.5.

Key	Control	What It Does
A	Jog Up	Moves the press up by the selected step size
B	Jog Down	Moves the press down by the selected step size
C	Step size	Selects how far a single jog press moves the press
D	Top Home	Runs the press up to the top proximity sensor and stops
E	Seat Home	Runs the press down to the bottom proximity sensor and stops
F	Back Arrow	Returns to main menu

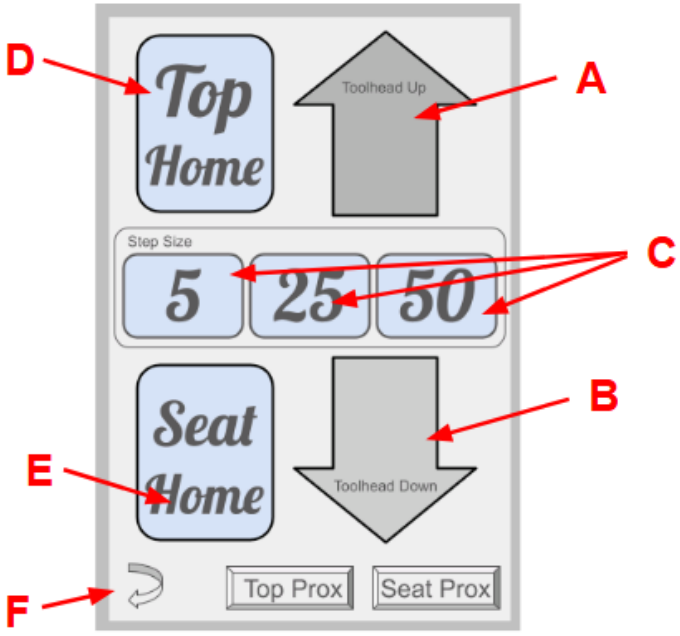

[Figure 4.1a — Manual Jog screen, each control marked A through G to match the table above]

4.2 Step Sizes

Jogging is coarse-to-fine. Start with the largest step to cover distance, then reduce as you approach the point you care about.

> **Why do you reduce as you close in —** At the largest step size you can overshoot the position you are trying to find, and at the top and bottom of the stroke overshooting means driving into something. Working down through the step sizes costs you a few seconds and removes that risk entirely.

4.3 Top Home and Seat Home

These two are not jogs. They are commanded moves — the press travels to a proximity sensor and stops there on its own.

Button	Where the Press Goes
Top Home	Up to the top proximity sensor
Seat Home	Down to the bottom proximity sensor

Use them when you want the press at a known reference position rather than at an arbitrary point in the stroke. They are also what you press to confirm a position you have just set — the press cycles, returns to your stored position, and lets you judge whether it landed where you wanted.

⚠ **The press moves the full distance —** Unlike a jog, these run until they reach the sensor. If the press is at the bottom of the stroke and you press Top Home, it travels the entire stroke. Be clear of the machine before you press either one.

If the press does not stop where you expect — It is stopping where the proximity sensor tells it to, which means the sensor is where the problem is. Check that the sensor has not been bumped or loosened, then relearn the stroke — see Section 3.3.

4.4 Terminate Run

Terminate Run aborts the operation in progress. When you have arrived at Manual Jog from **Index Loc** or **Cont. Seat**, it exits the teach without storing a new value, and the position you had before is kept.

Use it freely — Terminating does not lose your stored settings, and it is the correct response to any moment where you are not sure what the machine is about to do. Nothing about aborting a teach is a problem.

4.5 Common Uses

Situation	What to Do
Setting the index position	Arrive from Settings → Index Loc. See Section 3.4.
Setting the controlled seat position	Arrive from Settings → Cont. Seat. See Section 3.5.
Checking die clearance after a tool head change	Jog up in small steps and watch the tool head into the dies
Clearing a jam	See Section 7 — Faults and Recovery
Error mitigation during an automated run	The same screen format appears when a run is interrupted. See Section 7
Checking a sensor is reading	Jog to the sensor and watch its indicator. Section 6 covers the Sensor Menu
Returning to a known position	Press Top Home or Seat Home

Jogging does not change anything stored — Moving the press around on this screen does not alter the stroke, index, seat, or clutch values. You can explore the stroke freely without needing to reteach anything afterward. Remember that your clutch values are not protecting you while you do it.

5. Semi-Automatic Mode

Semi-automatic is for the work where you want the machine to do the moving but you want to stay in the loop between cycles.

Automatic mode runs until you stop it. Semi-automatic runs one cycle, or two, and then waits for you. That pause is the whole point — it gives you a controlled moment to look at what came out, adjust something, weigh a charge, or pull a round before anything else happens.

Use it when you are:

- Setting up or adjusting dies
- Doing load development
- Loading precision ammunition where you are hand-dropping powder
- Pulling bullets or reworking existing ammunition
- Troubleshooting something you need to watch happen

It is also the menu to reach for any time you simply want to move the press between its taught positions and see what it does there.

> ⚠ **The press homes as soon as you enter —** Opening this menu from the home screen automatically moves the tool head to the upper position. The machine moves before you press anything. Be clear of the press before you open it. The E-Stop is active from the moment power is applied — see Section 2.
>
> **Soft and hard errors occur here too —** Semi-Automatic Mode uses the same error handling as Automatic Mode. A soft error notifies you and waits; a hard error puts you into Manual Jog to drive the press out. See Section 7.7.

5.1 The Semi-Automatic Screen

From the home screen, press **Semi-Auto**.

Key	Control	What It Does
A	Top	Moves the tool head to the top position
B	Index	Moves the tool head to the taught index position
C	Seat	Moves the tool head to the bottom position
D	Single Cycle	Runs one cycle from wherever the press currently sits
E	Dual Cycle	Runs two cycles from wherever the press currently sits
F	Top clutch	Live readout of top clutch position during the cycle
G	Seat clutch	Live readout of seat clutch position during the cycle
H	Back Arrow	Exits the menu

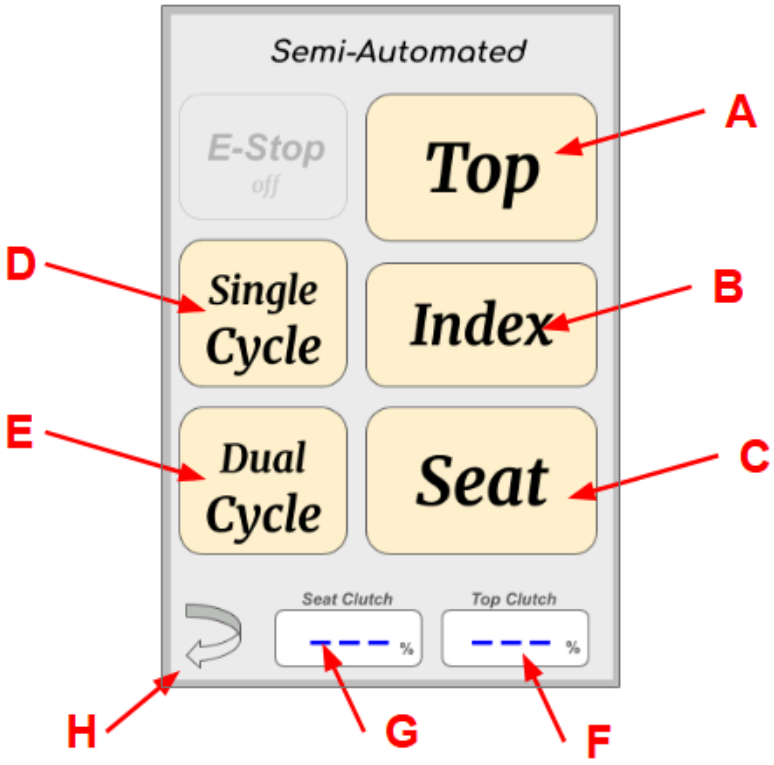

[Figure 5.1a — Semi-Automatic screen, each control marked A through H to match the table above]

> **The clutch readouts are live, not static —** They show your jam protection working in real time as the press cycles. They are readouts only — change the values in the Settings menu, Section 3.6.
>
> **Back Arrow works at any time —** You can leave this menu whenever you want.

5.2 Moving Between Positions

The three position buttons take the press to the points you taught during commissioning.

Press This	Press Goes To
Top	Top of the stroke
Index	The index position stored in Settings — see Section 3.4
Seat	Bottom of the stroke

This is the fastest way to check a taught position against reality. If the index position does not look right when you send the press to it, you now know to go change it rather than discovering it mid-run.

> **If a position does not land where you expect —** The press is going where it was taught. Reteach it in Settings rather than working around it. Sections 3.4 and 3.5.

5.3 Single and Dual Cycle

A cycle runs from wherever the press currently is and returns it to that same place.

That last part matters. The cycle is defined by your current position, not by a fixed start point:

Starting Position	What a Single Cycle Does
Seat	Up to the top, then back down to seat
Index	Up to the top, then back down to index
Top	Down to the seat, then back up to top

Dual Cycle follows exactly the same logic and runs it twice.

> **Pick your starting position deliberately —** Because the cycle returns you to where you started, the position you choose before pressing Single Cycle determines where the press sits when it finishes and where the next cycle will begin. Starting from seat is the natural choice when you are working at the tool head. Starting from index suits work where you want the shell plate advanced first.

5.4 Working in This Menu

> **Load development —** Send the press to seat, run a single cycle, pull the case, weigh the charge. Repeat until the drop is where you want it. Nothing advances until you press something.
>
> **Die setup —** Move to the position where the die you are adjusting does its work, then single cycle and inspect. Adjust, cycle again.
>
> **Hand-dropping powder —** Cycle to the point where the case is presented, drop your charge, then cycle on. The pause between cycles is as long as you need it to be.
>
> **Pulling and reworking —** Same pattern. One cycle, inspect, decide.
>
> **Clutch protection is active here —** Unlike manual jogging, your clutch values apply during semi-automatic cycling. The press moves within the clutch ranges you set in Settings, and the top and seat readouts on this screen give you real-time feedback as it does. Watching those readouts while you cycle is the easiest way to see whether your clutch values suit the work you are doing — see Section 3.6 to change them.

6. Sensors

Sensors are how the machine knows what is happening. Everything else in this manual — the stroke, the taught positions, the clutch — describes motion the machine performs. The sensors are the only part that tells it what actually occurred.

That distinction is worth holding onto. AutoDrive does not see your press. It infers the state of the machine from a small number of signals, and the quality of those signals sets the ceiling on how well everything else works. A well-set sensor makes the machine feel reliable. A marginal one produces intermittent faults that look like software problems and are not.

> **This section is about signal quality, not placement —** Physically mounting and positioning the proximity sensors is covered in Section 7 of your configuration's Quick Start Guide. This section covers what the sensors do, what the menu lets you do with them, and how to tell a good signal from a marginal one.
>
> ⚠ **If you have moved a sensor, go back to the Quick Start first —** Nothing in this section compensates for a sensor that is physically in the wrong place. Set it mechanically, then relearn the stroke (Section 3.3), then come here.

6.1 How the Sensor Menus Are Organized

Sensor setup runs three screens deep. Knowing which screen you are on makes the rest of this section straightforward.

Level	Screen	What You Do There
1	Sensor Menu	See all four ports at a glance and what is assigned to each
2	Sensor Configurator	Configure one port — what is on it and how it behaves
3	Sensor selection	Choose which sensor type is assigned to that port

You reach each screen by pressing into the one above it, and you come back out with the Back Arrow. The proximity setup screen sits off the first level as well, and is covered separately in Section 6.7.

6.2 The Sensor Menu

From the home screen, press **Sensor Menu**.

The screen shows ports **A**, **B**, **C**, and **D**. These correspond directly to the sensor input ports on the control box — port A on the screen is the port labelled A on the box. If a sensor has already been configured on a port, its name appears in that port's text box. An unassigned port is empty.

Reading the port status

Each port shows a status block telling you whether that sensor will be watched during a run.

Status Reads	Meaning
Active Sensor (green)	Enabled. The machine watches this sensor's output during a run.
Disabled Sensor	Programmed to the port but on standby. The machine ignores it until you activate it.

> **Disabled does not mean broken —** A disabled sensor is fully configured and stored. It is simply on standby. The machine will not act on anything it reports until you turn it on.

You activate a disabled sensor in real time from the Run Screen while a run is in progress — see Section 7.4. That is the point of the setting: configure everything you own once, then bring individual sensors in and out as the job calls for it, without reconfiguring anything.

> ⚠ **A disabled sensor catches nothing —** A sensor that is wired, assigned, and correctly tuned will still let a fault pass straight through if it is left on standby. If you want it watching, it must read Active here or be activated from the Run Screen.

Once a sensor is assigned, the status block wording changes to match that sensor rather than reading generically.

Getting to the other screens

Press This	Where It Takes You
Port A, B, C, or D text box	Sensor Configurator for that port — Section 6.3
Proximity Setup	Prox Setup & Debug screen — Section 6.7

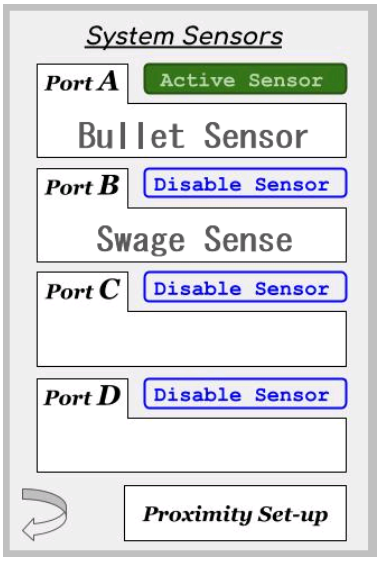

[Figure 6.2a — Sensor Menu showing four ports, with one active and one disabled sensor for contrast]

6.3 The Sensor Configurator

Pressing a port's text box opens the **Sensor Configurator** for that port. Everything about how one sensor behaves is set on this screen.

Setting	What It Controls
Assigned Sensor	Which sensor type is on this port. Opens the selection list — Section 6.4.
Station Location	Reserved. Not active in the current release.
Sensing Dwell	Reserved. Not active in the current release.
Active / Disabled	Whether the machine watches this sensor, or holds it on standby — see Section 6.2
Tool Head Up / Down	Whether the sensor is read with the tool head up or with it down
Sensing Logic	Normal or Inverse — see below
Output	Live readout of what the sensor is seeing right now

Every one of these is a touch input. Press it to change it.

> **Station Location and Sensing Dwell do nothing yet —** Both fields accept input, but the current software does not act on either. They are in place for planned functionality. Leave them alone. Setting them will not change how your sensor behaves, and a value entered there is not the reason a sensor is misreading.

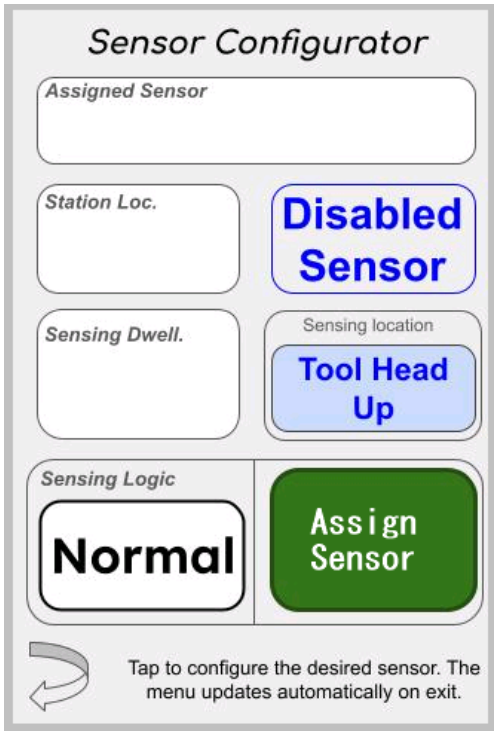

[Figure 6.3a — Sensor Configurator screen, each setting marked to match the table above]

Choosing tool head up or down

This setting tells the machine *when in the stroke* to look. You are choosing the point at which the thing you want to sense is actually observable.

Powder is the clearest example. On some setups the powder charge is visible with the tool head down, and on others it is only visible with the head up. Neither is more correct — it depends on where the sensor sits and what is in the way at each point of the stroke.

> **Pick the point where the answer is unambiguous —** Work out where in the stroke the sensor has a clear, repeatable view of what it is checking, and set it to read there. A sensor asked to read at a point where the view is partly obstructed will produce intermittent faults rather than an honest failure.

Sensing logic and the output readout

The **Sensing Logic** window at the bottom of the screen is worth understanding properly, because it is where most first-time setup problems get solved.

The **Output** readout shows, in real time, what the machine currently believes the sensor is telling it — in that sensor's own terms. A bullet sensor reports **Bullet Present** or **No Bullet** rather than a raw signal state.

The **Normal / Inverse** button sets the polarity of that interpretation.

> **How to use it —** Put the machine in a state you can verify with your own eyes, then read the Output.

1. Place a bullet where the sensor is looking.
2. Read the Output. If it reads Bullet Present, the logic is correct. Leave it on Normal.
3. If it reads No Bullet while a bullet is plainly there, press the button to switch to **Inverse**. The reading flips to match reality.

> **Set logic against something you can confirm —** The Output readout is only useful if you already know the true answer while you are looking at it. Do not set polarity on an empty machine — put a bullet, a case, or whatever that sensor watches for physically in place first.
>
> ⚠ **If the Output flickers or sputters —** A reading that jumps between states while the machine is sitting still indicates a bad sensor or a wiring fault, not a logic problem. The system will alert you when it detects this. Switching to Inverse will not fix it. See Section 9 for the troubleshooting steps.

6.4 Assigning a Sensor to a Port

From the Sensor Configurator, press **Assigned Sensor**. This opens the selection list.

Press the sensor you want, then press the **Back Arrow** to return to the Sensor Configurator. The name populates in the Assigned Sensor field with a small number in front of it. That number is the sensor's ID code — it is not the port letter and not the station location.

Available sensors

Sensor	What It Watches For
Bullet Orientation	Whether a seated bullet is correctly oriented
General	Catch-all. Anything you want the machine to watch that has no dedicated type on this list
Swage	The swaging operation at its station
Powder	Presence of a powder charge in the case
Smart Powder	Powder charge. Identical to Powder today; reserved for higher-fidelity sensing in a future release
Primer Orientation	Whether a primer is correctly oriented before seating
OAL	Overall length of the finished round
Gauge	Case gauging. Works with a case gauging die to confirm the case passes
Primer Reservoir	Primer level in the reservoir
Powder Reservoir	Powder level in the measure
Bullet Reservoir	Bullet level in the feeder
Case	Case presence
Spent Primer	Spent primer clearing correctly
Dead Man Switch	An operator-held stop device. A mobile stop, separate from the machine's E-stop
Custom A	A user-supplied sensor doing something not on this list
Custom B	A second user-supplied sensor
Erase	Clears the assignment and resets the port

> **Erase clears the port —** Selecting Erase removes the assigned sensor from that port and returns it to unconfigured. Use it when you move a sensor to a different port or take one out of service.

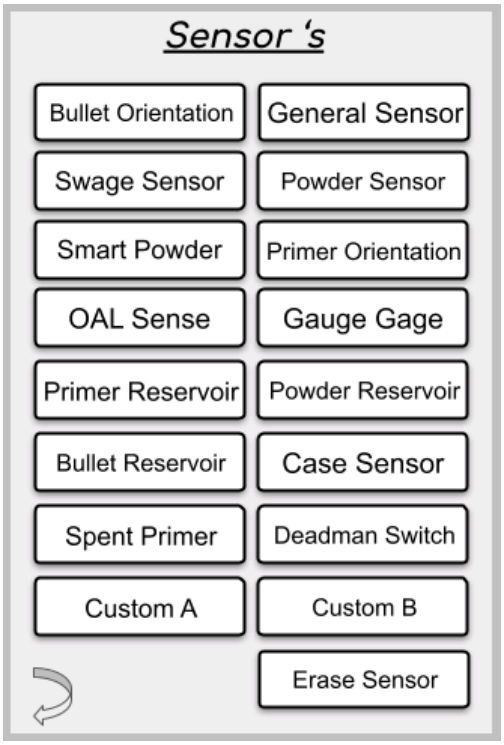

[Figure 6.4a — Sensor selection list]

> **Powder and Smart Powder do the same thing today —** Either will work for a standard powder check. Smart Powder exists for planned functionality that will use a higher-end sensor to report standard deviation and related data across a run. Until that ships, the choice between them makes no difference to how the machine behaves.
>
> **Use General when nothing else fits —** If you have a sensor watching for something this list does not name, assign it as General. It gives you a working input without waiting for a dedicated type.
>
> ⚠ **The Dead Man Switch is not an emergency stop —** It is an operator-held stop device assigned to a sensor port, and it is a convenience, not a replacement for the machine's E-stop. The E-stop is a hardwired safety circuit. A sensor port is not. Keep the E-stop within reach whenever the machine is running, regardless of what is on ports A through D.

6.5 Setting Up a Sensor — Worked Example

Every sensor is configured on the same screen in the same order, so rather than repeat that for each type, this walkthrough sets up the bullet sensor end to end. Once you have done it once, the rest follow the same process.

This example uses **port C**. Substitute whichever port you are using.

The bullet sensor is a good first one — every configuration ships with it, and it is already physically mounted during assembly. See Section 5.7 of your Quick Start Guide.

What you are trying to catch

The bullet sensor is not simply checking that a bullet exists. It is checking that the bullet is *correctly seated and oriented*. A good setup catches three conditions:

- A missing bullet
- An upside-down bullet
- A tilted or canted bullet

That last one is why the walkthrough ends with a slanted bullet rather than a good one. Getting the sensor to reject an obviously wrong bullet is easy. Getting it to reject a subtly wrong one is the actual work.

Wire the sensor

Plug the bullet sensor into port C on the terminal block — the third port from the top — with black on top, blue in the middle, and brown on the bottom. See Section 6.6 for the full wiring convention.

Once it is plugged in you should see the sensor energize, and the Output readout in the Sensing Logic window should be responding in real time. If neither happens, stop and check the wiring before going further.

Assign the sensor

1. From the home screen, press **Sensor Menu**.
2. Press **Port C**. This opens the Sensor Configurator.
3. Press the **Assigned Sensor** text box at the top of the screen.
4. Find **Bullet Sensor** in the list and press it. It highlights to confirm the selection.
5. Press the **Back Arrow**. You return to the Sensor Configurator and Bullet Sensor populates the Assigned Sensor field.

> ⚠ **If the name does not populate —** The selection should always carry back. If the field stays blank, that is a software fault rather than something you have done wrong. Open a support ticket rather than retrying repeatedly — see Section 3.7.

Set when it reads

1. Press the **Disabled Sensor** button to change it to **Enabled**.
2. Press the tool head button until it reads **Tool Head Up**. The bullet is only visible to the sensor at the top of the stroke.

Set the logic and the height

This is the part that takes patience. You are working the physical sensor height and the Normal / Inverse setting together until the machine's reading matches reality in every case.

1. Place a cartridge in the station with the bullet **upside down**.
2. Adjust the sensor up or down until the Output reads that no bullet is present.
3. Check the polarity. Wipe your hand in front of the sensor. If the Output says No Bullet while your hand is plainly in front of it, press the button to switch **Normal** to **Inverse**, or the reverse if it is already inverted.
4. Turn the bullet the right way up. The Output should now report a bullet present.

5. Cant the bullet over so it sits slanted in the case. The Output should report no bullet.

Repeat steps 9 through 12, moving the sensor in small increments, until all three conditions read correctly every time.

> **Tune with height, not with logic —** Normal / Inverse only flips the interpretation. If the sensor cannot tell a good bullet from a canted one, that is a positioning problem, and moving the sensor is the fix.

Save it

1. Press the **Back Arrow**.

The configuration is written to the machine's memory against that port and survives a power cycle. To change anything later — disable it, change the tool head reading, flip the logic — go back into port C, make the change, and press the Back Arrow again.

Repeat this process for each remaining sensor.

> **Station Location and Sensing Dwell are skipped deliberately —** Neither is active in the current release. See Section 6.3.

6.6 Sensor Wiring and Building Your Own

The proximity sensors and the bullet sensor arrive configured and wired from Gross Engineering. This subsection is for everything after that — understanding what your control board expects electrically, retrofitting Mark 7 sensors, and building a sensor of your own for the Custom A and Custom B assignments.

Which generation of control board you have

Look at the connector where the touchscreen plugs into the control box. That one port tells you which generation you have.

If the HMI Port Is	You Have	Sensor System
A 9-pin D-sub connector	Predecessor board	NPN, 5 V throughout, on screw terminal ports A–D
An RJ45 (Cat 6 style) connector	Current integrated control board	NPN, 12 V on screw terminal ports A–D, plus four Molex ports at 5 V

> **Check this before you buy or build anything —** Sensor voltage, connector style, and whether you need an adapter all follow from which board you have. It takes one look at the HMI port.

The Molex ports on the current board couple directly with Mark 7 style sensors, which remain in the 5 V ecosystem. That means a current-generation machine can run either voltage — 12 V sensors on the screw terminals, 5 V Mark 7 sensors on the Molex ports — without an adapter.

Wiring convention

All sensors follow the same three-wire convention regardless of voltage:

Wire	Function
Black	Signal
Blue	Ground
Brown	Load

> **Connector orientation —** With the connector plugged in, the wires run black on top, blue in the middle, brown on the bottom.

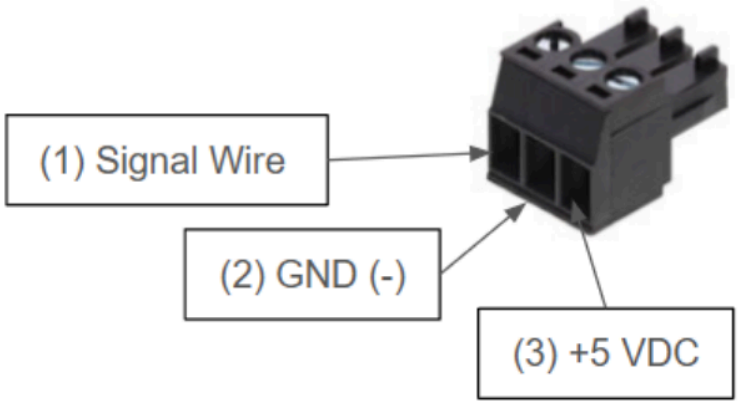

[Figure 6.6b — Screw terminal connector with black, blue, and brown wire positions labelled]

Molex ports

The Molex ports are numbered 1 to 4 and map straight across to the screw terminal ports.

Molex Port	Screw Terminal Port
1	A
2	B
3	C
4	D

A sensor on Molex port 3 is configured as port C on the Sensor Menu. The numbering is the only thing that changes — there is no reassignment to do in software.

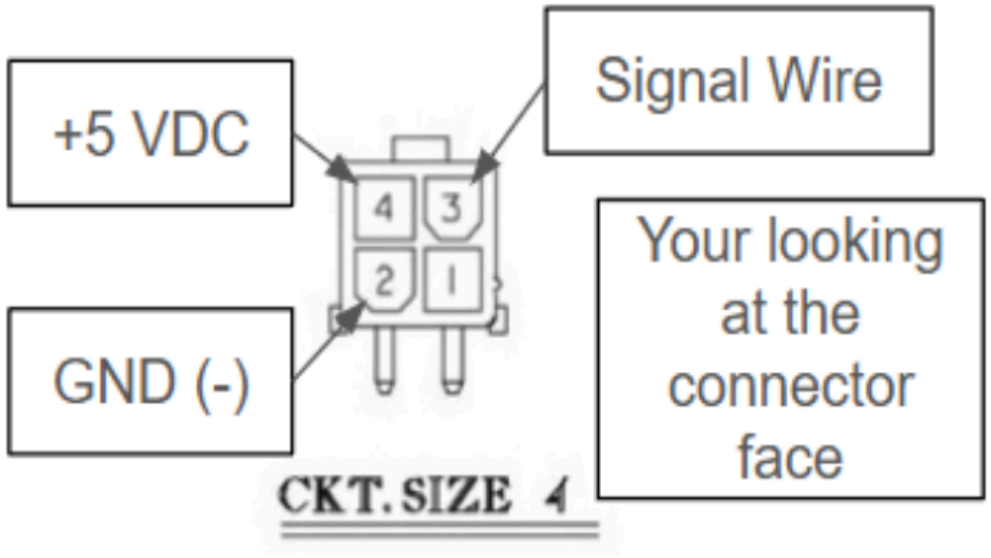

[Figure 6.6c — Molex ports 1 to 4 with their corresponding screw terminal ports labelled]

Retrofitting Mark 7 sensors to a predecessor board

Predecessor boards do not have the Molex ports, so running a Mark 7 sensor on one requires an adapter cable. It is a short cable with a 3-pin screw terminal on one end and a 4-pin Molex connector on the other, and it is straightforward to make yourself.

> **Sourcing the connector —** The Molex end is a standard 4-pin connector. Searching for a **4-pin CPU power cable** or **4-pin ATX** on Amazon or any electronics supplier will find the right part. You are buying it for the connector, not for its intended use.

Terminal block end (3-pin)

Terminal	Wire
1	Signal
2	Ground
3	+5 V

Molex end (4-pin)

Molex Pin	Wire
1	Not used
2	Ground
3	Signal
4	+5 V

> ⚠ **The two ends are not in the same order —** Signal is on terminal 1 but Molex pin 3; ground is on terminal 2 but Molex pin 2. Build to the tables, not by running the wires straight across. Molex pin 1 is unused.



[Figure 6.6d — Adapter cable, 3-pin screw terminal end to 4-pin Molex end, with pin numbers labelled]

> **Current-generation boards do not need this —** If your machine has the integrated control board, plug the Mark 7 sensor into the Molex port directly.

Building your own sensor

For Custom A and Custom B assignments, we recommend staying with an NPN switching configuration to match the rest of the system.

Normally open and normally closed. This is the distinction that matters most, and it is the one that catches people out. Sensors are marked **NO** or **NC**.

Type	With Nothing Present	With Something Present
Normally closed (NC)	Circuit is connected. The machine sees current.	The sensor opens.
Normally open (NO)	Circuit is open. The machine sees nothing.	The sensor closes, passing current.

The proximity sensors are normally closed. A consequence worth understanding: if you unplug a proximity sensor, the machine reads that as the target being present, because an unplugged sensor and a triggered sensor look identical to the board.

> ⚠ **Safety circuits are always normally closed —** The emergency stop and the proximity sensors are normally closed by design. If one of them is removed, damaged, or disconnected, the system infers a triggered state and creates a hard barrier rather than continuing to run. A sensor that fails should stop the machine, not go quietly unnoticed. Do not substitute a normally open device into either of these circuits.

For sensors on ports A–D, either type will work — the Normal / Inverse setting in the Sensor Configurator (Section 6.3) is what reconciles the sensor's polarity with what the machine reports. Wiring is not the place to fix a backwards reading.

6.7 Prox Setup & Debug

This screen does two things: it confirms your proximity sensors are plugged into the right ports, and it tells you whether their signals are stable enough to trust.

From the Sensor Menu, press **Proximity Setup**.

The proximity sensors are not configured like the port sensors. They are the machine's positional reference, they are always active, and they are not assigned or given logic. This screen exists to verify them, not to set them up.

Verifying the sensors

Each sensor has a live indicator reading **Detected** or **Not Detected**.

1. Hold a screwdriver in front of the top sensor and confirm the top indicator responds.
2. Repeat for the bottom sensor.
3. Press the **Back Arrow** when you are done.

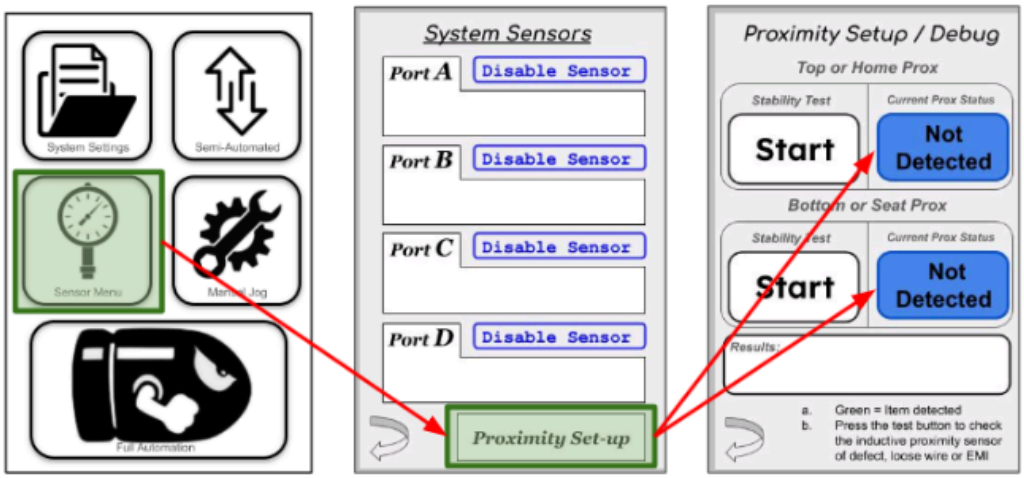

[Figure 6.7a — Prox Setup & Debug screen showing the live indicators]

> ⚠ **If the wrong indicator responds —** If triggering the top sensor lights the bottom indicator, or the reverse, the two sensors are plugged into swapped ports. A swapped pair will appear to work while jogging and will fail during a stroke. Power off the machine, exchange the two proximity connectors on the control box, then repeat this check.
>
> **Do this check first when something is behaving strangely —** It takes under a minute and it rules out the failure mode that is hardest to diagnose from symptoms alone.

Running a stability test

Press **Start** on this screen to run a stability test on both proximity sensors. The press stays stationary throughout — nothing moves.

The test watches for a sensor pulsing between read and no-read when it should be reporting one state steadily. If it finds that, it errors out on screen and tells you which sensor is at fault. No error means the signal is stable.

Use it after making any sensor adjustment, and any time you are chasing inconsistent behavior. A sensor that responds correctly when you hold a screwdriver in front of it can still be marginal in service — sitting slightly too far from the flag, picking up vibration, or dropping out under motion. The stability test is what finds that.

> **If the test errors —** The problem is physical, not a setting. Work through it in this order:

1. Check the sensor's connector at the control box and at the sensor itself. A partly seated connector produces exactly this symptom.
2. Check the cable for damage or a pinch point along its run.
3. Move the sensor closer to the flag. A sensor at the edge of its sensing range reads reliably when stationary and drops out under vibration.
4. Rerun the test after each change rather than making all three at once.

If it still errors with a known-good connection and the sensor close to the flag, the sensor itself has failed. See Section 10 of your Quick Start Guide for replacement parts.

> **The same symptom on a port sensor —** A port sensor with this problem shows it as a flickering Output readout in the Sensor Configurator rather than as a test result. Same fault, same causes, same order of checks. See Section 6.3.

6.8 When a Sensor Trips During a Run

A sensor reporting something unexpected during a run stops the machine and displays an error. What you do next depends on whether the press has to move to recover — see Section 7.7.

Most sensor faults are soft errors: correct the condition, cycle the E-Stop, and continue.

7. Automatic Mode

Automatic Mode is normal production. The machine cycles continuously, watches every active sensor as it goes, and stops when something is not as it should be.

Everything in the previous sections was setup. This is the section that describes running.

> ⚠ **The machine moves as soon as you enter this mode —** Entering Automatic Mode immediately begins homing the tool head to the top position. Confirm your hands, tools, and loose items are clear before you press the icon. The E-Stop is active throughout — see Section 2.

7.1 Starting a Run

1. From the home screen, press the **Bullet icon**.
2. The tool head begins homing to the top position on its own.
3. While it is homing, set your run values. Touch any value to open the number pad.
4. When homing is complete, press **Start** to enter the Run Screen.

Run values

Setting	Default	What It Controls
Round Count	10,000	How many rounds the run will produce before stopping
Speed (RPH)	1,000	Rounds per hour
Top Dwell	0 if not set	How long the press pauses at the top of the stroke, in milliseconds
Bottom Dwell	0 if not set	How long the press pauses at the bottom of the stroke, in milliseconds

> **You can set these while it homes —** The homing move and the value entry happen at the same time. There is no need to wait.

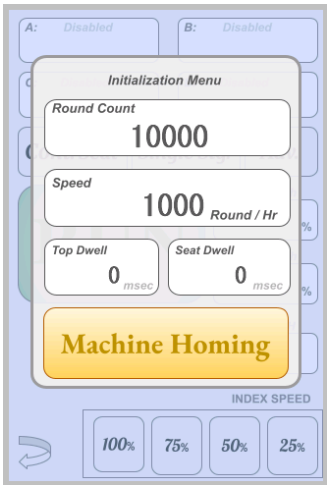

[Figure 7.1a — Automatic Mode setup screen with the four run values]

> **The dwells have no default —** Round count and speed come pre-filled; the dwells do not. Left alone, both run at zero. Once you enter a value it is retained through a power cycle, so setting them is a one-time task rather than something to redo each run.
>
> **Dwell values are not tuned —** Both are in milliseconds, and whatever you enter is what the run uses. Unlike the speed and clutch behaviour described in Section 7.3, these do not adjust themselves as the machine settles.

7.2 The Run Screen

The Run Screen is where the machine actually runs. Controls are listed here top to bottom as they appear on the screen.

Key	Control	What It Does
A	Port A	Enables or disables the sensor on port A. Shows the assigned sensor's name.
B	Port B	Enables or disables the sensor on port B
C	Port C	Enables or disables the sensor on port C
D	Port D	Enables or disables the sensor on port D
E	Top Clutch	Live percentage readout at the top of the stroke
F	Seat Clutch	Live percentage readout at the seating position
G	Rounds Per Hour	Live RPH readout
H	Index Speed	100%, 75%, 50%, and 25% buttons. Sets how fast the tool head rises.
I	Run / Pause	Starts the run, then switches to Pause. Press again to resume.
J	Cycle count	Cycles completed, and the total the run is set to produce
K	Control Seat	Slows the seating portion of the stroke
L	Single Stage	Runs one cycle at a time
M	Advanced	Reserved. Not active in the current release.
N	Back Arrow	Exits the run

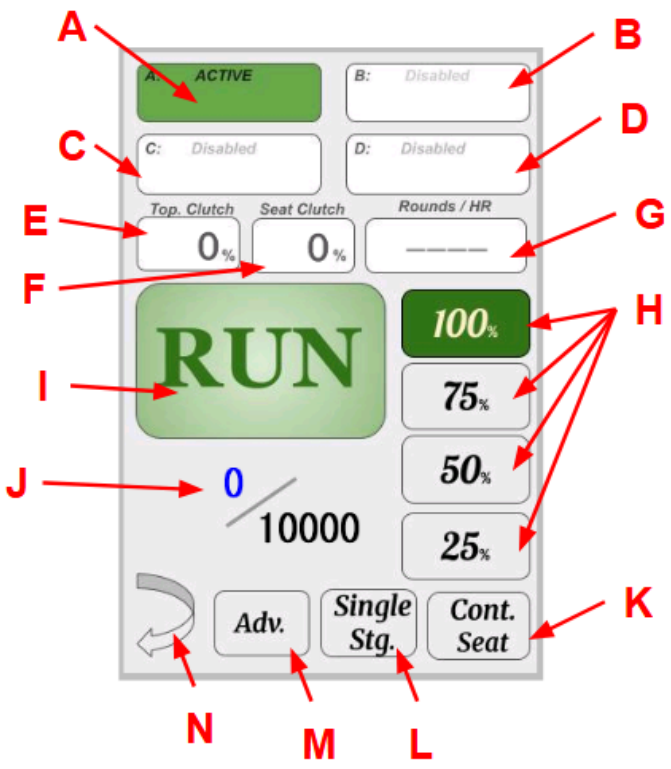

[Figure 7.2a — Run Screen with each control numbered to match the table above]

Reading the screen

> **Green means active —** The four port buttons illuminate green when their sensor is enabled and grey out when it is not. Each shows the name of its assigned sensor either way, so you can always see what is configured even when it is switched off. The Index Speed, Control Seat, and Single Stage buttons follow the same convention.
>
> **Index Speed is a single choice —** Pressing one of the four percentages turns off whichever was selected before. Only one is ever active.
>
> **Control Seat and Single Stage work together —** Both can be on at the same time.
>
> **Clutch readouts of zero —** If nothing is taught to a clutch value, or the system is not encountering anything at that end of the stroke, the readout reads zero. During a run, zeros across every value including the stroke mean something else entirely — see Section 3.6.

How a cycle is counted

A cycle is counted when the tool head reaches the bottom. That is the point the work is done, regardless of whether the press has travelled back up yet. The count updates after each one, alongside the total the run is set to produce.

Run, Pause, and Back

> **Run and Pause are the same button —** It switches state as you press it. Run becomes Pause; pressing Pause returns it to Run.
>
> **Pause stops at the end of the stroke, not where the press stands —** If the press is travelling down, it stops at the bottom. If it is travelling up, it stops at the top. Stopping mid-stroke would leave a case in an unknown state. If you need motion to stop immediately, use the E-Stop.
>
> **The Back Arrow finishes the stroke too —** Pressing Back while the press is moving lets it complete the stroke it is on before exiting. It does not stop the machine where it stands.

7.3 The First Cycles — Self-Tuning

The machine tunes itself to what you are loading. It does this on its own, at the start of every run, and it is worth knowing what you are watching so you do not mistake it for a problem.

For roughly the first 12 to 20 cycles, the machine is learning. You will see the rounds per hour rating climb or fall, and you will hear the motion smooth out — both on the way down into the seat and on the way back up to the top. That is the system working out how your particular load behaves and adjusting to it.

> **This is normal. Let it happen —** A run that starts rough and settles is the machine doing exactly what it is supposed to. Resist the urge to intervene in the first twenty cycles unless a sensor faults.

What it is tuning for

The machine is chasing two things at opposite ends of the stroke.

At the Bottom	At the Top
Arriving at the seating position and stopping cleanly, without having to recover from the load induced by the work	Reaching the top position precisely, cycle after cycle

Once the learning phase passes, tuning does not stop. The machine keeps adjusting throughout the run to hold both of those targets as conditions change.

> **Loads differ, so learning is per-run —** A different bullet, a different charge, or a different case behaves differently under the press. The machine relearns rather than assuming the last run applies.

What a settled run looks like

Once the machine reaches stability, it runs consistently. You will not see it struggling between the bottom and the top, and you will not see it recovering. The seat position is consistent, the index at the top is clean, and the motion between them is even.

> **Occasional variation is the brass, not the machine —** New, used, and sized cases do not behave identically under the press. A settled machine absorbs that — you may see it work harder on a given case and carry on without faulting. That is the tuning doing its job.
>
> ⚠ **Struggling on every cycle is a fault, not tuning —** Occasional variation is normal. Consistent struggle is not. If the machine is labouring at the same point cycle after cycle, stop and find the cause rather than raising the clutch values to make the symptom go away. See Section 9.

7.4 Reading the Sensor Indicators

Each enabled sensor shows its state in real time while the machine runs. A sensor is only evaluated within its monitoring window — the point in the stroke it was configured to read at.

Indicator	Meaning
Green	The sensor is in its expected state
Blue	The sensor is not in its expected state and may generate an error

> **Blue is a warning, not yet a fault —** A blue indicator means the machine is seeing something it did not expect at that point in the stroke. Watching which sensor goes blue, and when, is the fastest way to understand a fault before it stops the run.

7.5 When to Use the Run Adjustments

The controls in Section 7.2 can all be changed while the machine is running. This subsection is about when you would reach for each one.

Index Speed

Lowering Index Speed slows the tool head on its way up, which slows how fast the shell plate indexes. The default of 100% is right for most loading. Lower it when the index itself is disturbing something.

Reach for a Lower Setting When	Why
Powder is throwing or sloshing out of the case	A slower index does not fling the charge
Bullets are toppling as the plate advances	Rapid indexing knocks them off the case mouth
Case feeding or ejection needs a more deliberate motion	Slower plate movement gives both time to happen cleanly

> **Slower is not safer, it is just slower —** Dropping Index Speed costs you throughput. Use it to solve a problem you can see, then put it back.

Control Seat

Control Seat slows the seating portion of the stroke — a longer deceleration into the bottom rather than arriving at full speed. It applies the controlled motion taught at commissioning; see Section 3.5.

It does two things at once. The slower approach gives you deliberate control, and because the press is under load for longer through that portion of the stroke, it also gives you more force where the work is happening.

Reach for it when:

- You are decapping hard brass or sizing, and want the force rather than the impact
- You are seating a bullet or inserting a primer and want deliberate, controlled contact
- You want the powder to settle cleanly on the way down

> **Control Seat as an alternative to bottom dwell —** A slower approach into the seat gives the charge time to drop and trickle down on its own, rather than arriving fast and then waiting there. If you are reaching for bottom dwell to settle powder, try Control Seat first — you get the same settling as part of the motion instead of as a pause.

Single Stage

Single Stage runs one cycle at a time. The press travels down to the seat and back to the top, then waits for you to press Run again.

Reach for it when you want to see each round before committing to a run:

- Proving out a die change or a new load
- Checking the first few rounds of a session
- Working through a problem cycle by cycle
- Running a small batch by hand

> **Control Seat and Single Stage together —** Both can be on at once, and the combination is the most controlled way to run the machine: one cycle at a time, slowed through the seat. That is the setting to use when you are troubleshooting something at the bottom of the stroke and want to watch it happen.

Sensor toggles

Bring a sensor in or out of the run in real time. A sensor configured as Disabled in the Sensor Menu (Section 6.2) is activated here.

> **Turning a sensor off does not fix it —** If a sensor is faulting repeatedly, switching it off will let the run continue and will also stop the machine catching the thing it was watching for. Use the toggle to run a job that does not need that sensor, not to silence one that is telling you something.

The live readouts

Top Clutch, Bottom Clutch, and Rounds Per Hour update as the machine runs. The clutch readouts are a percentage of what the system is actually encountering at each end of the stroke, so they keep reporting after the machine has settled.

> **Use them to judge your clutch values —** If the machine faults on clutch and the readouts show it running close to the limit, the value may be tighter than your press needs. If it sits well below, you have room to tighten. See Section 3.6.

7.6 Stopping the Machine

To Do This	Use This	What Happens
Stop at the end of the stroke	Pause	The press stops at the top or the bottom, whichever it is heading toward
Stop all motion immediately	E-Stop	Motion stops where it is
End the run entirely	Terminate Run	The run ends and the machine returns to the home screen. The press does not move.
Leave the screen	Back Arrow	The machine safely stops and returns to the previous screen

> **Terminate Run does not move the press —** It ends the run and returns you to the home screen, leaving the press exactly where it sits. If it stopped mid-stroke, it stays mid-stroke. Use Manual Jog or Semi-Automatic Mode to move it from there.

7.7 Errors and Recovery

The press can stop at any point in a cycle. The error message on screen identifies the condition that caused it.

> **Always correct the condition before restarting —** Restarting into an uncorrected fault produces the same fault, and in some cases makes it worse.

Resetting the E-Stop

1. Twist the E-Stop clockwise to release it.
2. Wait one to two seconds for the system to reinitialize.
3. Read the error message that appears.

Soft errors

A soft error notifies you and waits. The press does not need to move to recover — clear the error and resume the run.

Typical causes: primer orientation, a missing bullet, bullet orientation, and powder faults.

Hard errors

A hard error puts the machine straight into the Manual Jog screen so you can drive the press out of the condition yourself. It has stopped somewhere it cannot simply resume from.

Typical causes: swage faults, top or bottom clutch faults, and an E-Stop.

The jog controls behave exactly as they do in Section 4 — same step sizes, same movement. Use them to clear the jam, correct the condition, or free whatever stopped the press.

> ⚠ **Clutch protection is off here, as it is on any jog screen —** A hard error lands you on the one screen where nothing is watching for a jam, and one of the faults that puts you here is a clutch fault. The machine will drive through whatever is in its way. Move in small steps and know where your hands are.

Getting out of a hard error

There are two ways out, and no power cycle is needed for either.

To Do This	Press	What Happens
Resume the run	Top Home or Seat Home	The press homes to the top or the bottom and releases you from the jog screen
End the session	Terminate Run	The run ends and you return to the home screen

> **Homing is the only way back into the run —** Jogging alone will not release the jog screen, however well you have cleared the fault. The machine needs the press at a known position before it will hand control back, so finish by homing to the top or the bottom.
>
> **Terminate Run is there for the bad ones —** If the condition is beyond a quick fix, end the session and deal with the machine on your own terms. It is in the lower corner of the screen.
>
> **The difference is whether the press must move —** That is the whole distinction. A soft error is cleared where the machine stands. A hard error has left the press somewhere it cannot resume from, and the machine hands you the jog controls to get it out.

Both types occur in Semi-Automatic Mode as well as Automatic Mode.

Returning to operation

1. Correct the condition that caused the error.
2. Clear the error message.
3. Return the press to a safe operating position.
4. Resume when ready.

7.8 Seat / Top Position Error

This error means the press did not reach the proximity sensor it expected to reach. It is the catch-all fault for a missed position — the machine knows it did not arrive, but not why.

Check for:

- Mechanical binding anywhere in the stroke
- Misalignment in the drive assembly
- Gearbox or drivetrain issues

Correct the issue, re-home, and resume operation.

> **A missed position is mechanical until proven otherwise —** This fault is rarely a settings problem. Something physical stopped the press from getting where it was told to go. If the mechanical checks come back clean, verify the proximity sensors themselves in Section 6.7 before looking anywhere else.

8. Maintenance

AutoDrive is a mechanical system driving another mechanical system. This section covers the maintenance of AutoDrive itself — the gearbox, the drivetrain, the fasteners that hold it to your press, and the parts that wear.

> ⚠ **Press maintenance follows your press manufacturer —** Alignment procedures, torque specifications, lubrication points, and service intervals for the press itself are defined by Dillon or Mark 7 in their own manuals. Nothing in this section supersedes their guidance. Where a procedure below touches press hardware, use their specification, not ours.

8.1 Keep the Machine Clean

Reloading is dirty work. Spent primers, powder residue, case lubricant, and brass shavings accumulate quickly, and they accumulate in exactly the places that matter — the shell plate, the primer path, the ram, and around the tool head.

When something starts binding, jamming, or indexing poorly, the first assumption is usually that AutoDrive is at fault. It usually is not. Check for debris buildup, spent primers where they should not be, and dry or contaminated contact surfaces before you adjust anything.

Clean the machine at **10,000 cycles at the most**. More often is better. There is no penalty for a clean press.

> **Debris first, settings second —** A dirty machine produces the same symptoms as a mistuned one: struggle through the stroke, inconsistent indexing, faults that come and go. Cleaning is faster than diagnosing, and it resolves the problem more often than not.

8.2 Fastener and Alignment Check

AutoDrive relies on the gearbox self-aligning to the press. That alignment is established during assembly and held by fasteners that can drift under continuous cyclic load.

Every **10,000 rounds**, systematically loosen and retighten the mounting hardware. This is a quick check, and it confirms nothing has walked out of alignment.

Work in this order, loosening and retightening one group at a time:

1. The bolts holding the press to the base plate
2. The clamping collar bolts
3. The L-brackets to the base plate
4. The gearbox to the L-brackets

> **Use your press manufacturer's torque specification —** The fasteners securing the press to the base plate are the press manufacturer's hardware on their frame. Torque them to their published specification.
>
> ⚠ **Binding that appears out of nowhere is an alignment problem —** If the machine has been running well and suddenly starts to struggle or bind, assume something has come out of alignment. Do not compensate by raising clutch values — that masks the fault and lets it continue to wear the drivetrain. Run the loosen-and-retighten check and let the assembly re-seat.

8.3 Gearbox Oil

The worm gearbox is the one component with a scheduled fluid service.

The audible tell. A clicking or bumping sound from the gearbox means the oil is due for a change. Do not wait for the interval if you are hearing it.

Interval. Change the gearbox oil every **20,000 to 30,000 cycles**.

> **Specification.** Use an **ISO VG 320 synthetic worm gear oil**. A PAO or PAG based formulation is preferred — worm gears run high sliding friction, and synthetics hold film strength under that load far better than mineral oils. The gearbox has a small reservoir, which is exactly the case where a synthetic earns its cost.

Procedure. The gearbox must be disassembled to drain it. There is no drain plug that will empty it completely.

> ⚠ **Do not mix oil types —** PAG synthetics and mineral oils are not compatible, and mixing them causes additive precipitation. Drain the gearbox fully rather than topping it up. If you do not know what is in there, drain and refill with a known specification.
>
> ⚠ **Metal particles mean replacement, not a refill —** If you find excess metal in the drained oil, the gearbox is wearing internally and new oil will not stop it. Replace the gearbox. Sourcing guidance is in Section 8.6.

8.4 Keys and Keyways

The keys transmit all drive torque between the gearbox and the press. They are the intended wear point, and they are cheap to replace.

Watch for **slop in the main drive shafts** — play that was not there when the machine was new, or a small amount of lost motion at the reversal at each end of the stroke.

When you find it, inspect the keyways. If the keyways show induced wear, replace the keys. Standard stock keys in the correct size are widely available and can be sourced independently.

> **Slop compounds —** A worn key lets the shaft move before it drives, which puts a shock load on the keyway every reversal, which wears it faster. Catching it early keeps the repair at the key rather than the shaft.

8.5 The Proximity Flag

The proximity flag is a 3D printed component. If it breaks, cracks, or the micro-adjustment features strip, replace it.

Replacement flags are available from Gross Engineering, and printable files are published for customers who would rather make their own.

8.6 Changing the Gearbox Ratio

Every machine ships with a **1:20** worm gearbox. That ratio is the general-purpose middle of the range, and it suits most handgun and small rifle loading.

Changing the ratio is not maintenance — it is a configuration decision. It trades speed against torque, and the trade is linear in both directions.

Ratio	Relative Speed	Relative Torque	Typical Use
1:10	2×	0.5×	High-volume processing, light loads
1:15	1.5×	0.75×	Processing work with some margin
1:20	Baseline (as shipped)	Baseline	General loading
1:30	0.67×	1.5×	Rifle cartridges larger than 5.56
1:40	0.5×	2×	Heavy sizing, swaging, large cases
1:50	0.4×	2.5×	Maximum torque, precision work

Why you would go higher than 1:20. Two reasons, and the second is easy to overlook.

The first is torque. Rifle cartridges larger than 5.56, tough military brass, heavy sizing and swaging work — anything where the press is genuinely fighting the case — benefits from a higher ratio.

The second is precision. A higher reduction means more motor rotation per unit of press travel, which gives the machine finer positional resolution. It has more room to land exactly where it is told. If you are doing precision work, a higher ratio is worth considering even where torque is not the limiting factor.

Why you would go lower than 1:20. Speed, for processing work. High volume, light loads, and throughput as the objective.

> **Slower is not more capable, and faster is not less —** The gearbox does not change what the machine can do, only how it does it. A higher ratio does not make the press stronger in any absolute sense; it changes where the motor's output lands on the speed-torque curve.

Sourcing a gearbox

The gearbox is a standard industrial worm gearbox, not a proprietary part. Alternate ratios are inexpensive and widely available.

Contact Gross Engineering for the exact specification to match before you order — frame size, shaft dimensions, and mounting pattern all have to carry across for the gearbox to drop into the existing brackets and shafts.

After a ratio change

Changing the gearbox changes the relationship between motor rotation and press travel, so the machine has to be retaught its positions. The motion profile does not — that is self-tuning and will relearn on its own during the first cycles of the next run (Section 7.3).

Reteach the following, in this order:

1. **Learn the stroke** (Section 3.3)
2. **Set the index position** (Section 3.4)
3. **Set the controlled seat position** (Section 3.5)

Everything else the machine works out for itself.

> **This is the same list as any drivetrain change —** Anything that alters the mechanical relationship between the motor and the press requires these three to be retaught. A ratio change, a coupler change, or a shaft replacement all land in the same place.

9. Troubleshooting

Before working through this section, understand what AutoDrive changes about diagnosis.

AutoDrive makes press problems more visible, not less. It cycles the press identically every time, which means a die that is slightly off, a fastener that is loose, or a press that was never fully set up shows up as a repeatable fault instead of something you unconsciously compensated for by hand. Running the press manually hides a great deal of inconsistency. Automation stops hiding it.

> ⚠ **Confirm the press is set up correctly first —** Most calls that begin as an AutoDrive fault end as a press setup issue. Before adjusting anything on AutoDrive, confirm your press is assembled, adjusted, and running to Dillon's or Mark 7's published instructions. Their manual is the authority on their machine.

This section is organised by **where the problem lives**, because that determines who fixes it and which manual you need:

Section	Covers
9.1	Software and controller — the touchscreen and its communication with the control box
9.2	AutoDrive — the control box, stepper driver, drivetrain, and sensors
9.3	The press — the machine AutoDrive is driving
9.4	The reloading process — dies, brass, and load quality

9.1 Software and Controller

Symptom	Likely Cause	What to Do
Screen reaches the home screen but nothing responds to touch. Power cycling changes nothing.	Touchscreen fault.	Not a field repair. Open a support ticket with Gross Engineering and we will work through it with you.
Screen powers up and goes straight to an error page reading not connected.	Loose data connection between the touchscreen and the control box.	Power cycle the machine. If it happens a second time, open the touchscreen and confirm the yellow and blue wires on the back are fully seated in their connector.
Touch registers, but the press lands roughly an inch away from where you touched.	Touchscreen calibration has drifted.	Open a support ticket. We will supply a recalibration code and walk you through it.
Every value reads 0, including the learned stroke.	The touchscreen is not communicating with the control box.	Power cycle the machine. If the values are still 0 after a restart, contact Gross Engineering before continuing.
A sensor name will not populate after assignment (Section 6.5).	Software fault.	Open a support ticket. Do not continue configuring that port.

> **Recalibration is not a routine procedure —** The recalibration code is supplied by support rather than published here, because it is not something that should be run casually. If your screen needs it, we will give it to you.

9.2 AutoDrive

Motion and direction

These faults are almost always wiring at the stepper driver. The driver sits inside the control box.

Symptom	Likely Cause	What to Do
E-Stop pressed and the screen does not register it, or the machine does not stop.	Loose wiring at the touchscreen, the HMI, or the driver enable pair.	Check for loose wires in the touchscreen and HMI. In the control box, confirm terminals 5 and 6 — ENA− and ENA+ — are fully seated.
Commanded motion does nothing, or errors immediately.	Stepper driver fault.	Look at the driver LED. Green is normal. Flashing red means the driver has faulted — see the LED reference below. Confirm both motor cables are fully connected and power is present.
Down arrow drives the press up, up arrow drives it down.	Direction polarity is inverted.	Flip DIP switch 4 on the side of the driver to the opposite of its current position.
Down arrow drives down, but up arrow also drives down.	Direction signal not reaching the driver.	Remove and reseat terminals 3 and 4 — DIR− and DIR+. Check for a broken or disconnected conductor.
Neither arrow produces any motion.	Pulse signal not reaching the driver.	Confirm terminals 1 and 2 — PUL− and PUL+ — are fully seated.

> **Polarity after a configuration change —** DIP switch 4 is also the correct fix if you relocate the motor or run any configuration other than our standard. The direction is a wiring convention, not a fault.

Stepper driver terminal reference

Terminals	Signal	Function
1 and 2	PUL− / PUL+	Pulse. Commands motion.
3 and 4	DIR− / DIR+	Direction. Sets which way.
5 and 6	ENA− / ENA+	Enable. Allows the driver to energise the motor.

Stepper driver LED reference

The driver shows a green LED at power-up. When a protection trips, the red LED blinks a count, pauses, and repeats. Count the blinks.

Blinks	Fault	First Thing to Check
1	Over-current	Motor wiring. Check for a short in the cable or the motor. Power off immediately.
2	Over-voltage	Supply voltage. Power off immediately.
3	Chip error	Power cycle. If it persists, the driver needs replacement.
4	Fail to lock motor shaft	Motor and encoder cables. Both must be fully connected.
5	EEPROM error	Power cycle. If it persists, the driver needs replacement.
6	Fail to auto-tune	Power cycle. If it persists, contact Gross Engineering.
7	Position following error	Mechanical. Something is binding. See Section 7.8.
Solid red	Driver board failure	Replace the driver.

> **Two of these matter in practice —** Over-current means a wiring or motor short and needs power removed immediately. Position following error means the press could not physically go where it was told, which is a mechanical problem, not an electrical one. The rest generally resolve to a driver that needs replacing.
>
> **The driver manual is the authority —** These codes are supplied for quick reference. The stepper driver is a StepperOnline CL86T and its own manual is the definitive source, particularly if your driver is a different hardware revision from the one described here.

Seat fails

A seat fail means the press struggled at or near the bottom of the stroke — usually with audible strain from the motor — and then stopped. There are three distinct causes and they need different responses.

Pattern	Likely Cause	What to Do
Random. After an E-Stop and reset, home is perfectly fine and the machine runs normally again.	Low voltage fault between the stepper and the control board. A known fault on previous-generation boards.	Contact Gross Engineering. Current boards have this corrected; affected earlier boards are replaced.
Recurring, and worse with hard or heavy brass.	The press is genuinely working hard, or the clutch is set too tight.	Check die positions and case condition. Lubricate rifle and heavy brass. Consider reducing speed. See the clutch guidance below.
Consistent at high speed only.	The stepper produces less torque as speed rises.	Reduce Rounds Per Hour. Running flat out is not within capability for every case.

> ⚠ **Same symptom, different fix —** Seat fails that come and go with brass hardness, and that clear cleanly on a reset, point at the clutch setting or the load itself. Seat fails where the machine visibly recovers into the proximity sensor and the clutch readout climbs point at something mechanically loose — see Walking below. Raising the clutch value fixes the first and hides the second.

Setting the clutch when you are getting fails

Set the clutch **high and work it down**, not the other way around.

The real-time readout on the Run Screen fluctuates during normal operation. That is expected — it reports what the machine is actually encountering, cycle to cycle.

If the clutch is set too low, you will get inconsistent fails when the machine meets hard brass. When that happens, raise the value by a generous margin, then walk it back down to where you are confident it still catches a real jam.

> **The clutch is a leash, not a torque setting —** Raising or lowering it does not make the machine stronger or weaker. It is positional. It defines how far out of position the press may drift before the system stops. See Section 3.6.

Walking

> **Walking** is when the clutch value grows sharply at one end of the stroke and the system has to compensate. You see it most clearly at the bottom: the tool head arrives, does not land where it should, and enters a recovery — a slow drive into the proximity sensor.

Occasional recovery is the clutch doing its job. Random or inconsistent walking is a mechanical fault.

Likely Cause	What to Do
Proximity flag damaged or loose.	Inspect the flag. Replace if cracked or broken (Section 8.5).
Proximity sensors loose in the bracket.	Retighten, then re-verify in Section 6.7 and retune.
Indexing pawl loose on the press.	Mark 7 presses in particular. Secure with thread lock, then readjust the proximity sensors and retune.

> **Walking is mechanical until proven otherwise —** No settings change fixes a loose flag or a loose sensor. Find the movement first, then retune around it.

Nothing moves, but no error appears

If the press reaches an end of the stroke, stops, and the Run Screen shows no error at all, look inside the control box for a flashing red LED on the stepper driver.

This indicates a disconnect between the stepper driver and the control interface. It will usually correct itself on the next catch, but it is a genuine fault.

> ⚠ **Report this one —** A silent stop with no error on screen is a glitch we want to know about. Open a support ticket even if the machine recovers on its own.

9.3 The Press

Symptom	Likely Cause	What to Do
Binding, jamming, shell plate not advancing cleanly.	Debris buildup, spent primers, dry or contaminated contact surfaces.	Clean the machine before adjusting anything. See Section 8.1.
Binding or struggle that appeared suddenly on a machine that was running well.	Mounting hardware has drifted out of alignment.	Run the loosen-and-retighten check in Section 8.2.
Top index drifting out of position over time.	Indexing pawl has come loose. Common on Mark 7 presses.	Secure the pawl, readjust the proximity sensors, and retune.
Missed top or seat position with no other symptom.	Mechanical binding, misalignment, or drivetrain.	See Section 7.8.

> ⚠ **Press adjustments follow the press manufacturer —** Hard stop tuning, pawl adjustment, shell plate service, and every other press procedure is defined by Dillon or Mark 7. Use their specification. Nothing in this manual supersedes it.

9.4 The Reloading Process

Some faults are not machine faults. They are the reloading process becoming visible.

The first rounds of a run are not representative

Progressive presses on both Dillon and Mark 7 have some tool head wobble by design. When you start a run with an empty shell plate and fill it station by station, the plate is unevenly loaded, and the first few rounds will commonly come out oversized, undersized, or simply inconsistent.

> **Do not chase the first few rounds —** They are the shell plate filling, not a setup problem. Let the plate come up to a full complement before you judge anything or adjust anything.

Die balance across the tool head

Once running, the force across the tool head is rarely even. Heavy operations — sizing, swaging, hold-down — concentrated on one side of the plate, with seating on the other, produce an imbalance that shows up in the finished round.

Think of the tool head as a seesaw. Load one side heavily and the other side moves.

Symptom	Likely Cause	What to Do
Load dimensions inconsistent over time.	Something loose — a die, the tool head, or a component.	Check and secure. Recheck after the fastener interval in Section 8.2.
Consistent dimensional bias between stations.	Die layout imbalance across the tool head.	Rebalance heavy operations across the plate where your die set allows.
Inconsistent sizing on rifle or heavy brass.	Insufficient case lubrication.	Lubricate. Heavier brass needs it, whether or not the die claims otherwise.

> **Check your ammunition as you load —** Automation does not remove the need to measure. Pull rounds periodically through a run and make small adjustments to what you are actually seeing, rather than trusting a setup that was correct at the start.

10. Software Updates

AutoDrive has two pieces of software that update independently:

- The **main board** software, updated with a `.hex` file over a micro-USB cable from a computer.
- The **touchscreen (HMI)** software, updated with a `.TFT` file from an SD card.

A release may include one or both. The release notes tell you which.

> **Your settings are retained —** All commissioning values and sensor assignments live in hard memory on the board. Stroke, index position, controlled seat, clutch values, and every port assignment survive a software update. You do not need to recommission after updating.
>
> ⚠ **If a setting is missing after an update —** That is not expected behaviour. Do not re-enter the values and carry on. Contact Gross Engineering first. Lost settings indicate a memory or write fault, and re-entering them removes the evidence of what went wrong.

10.1 Where Updates Come From

Gross Engineering distributes software, manuals, and release notes through GitHub. Think of it as an online file library holding the current version of everything.

You do not need a GitHub account to download updates.

> **Releases page —** https://github.com/BteamEngineering/AutoDrive/releases
>
> **Video walkthrough —** https://www.youtube.com/watch?v=I_HUpijfGtg

You can also reach the release page by scanning the **QR code** on the Manuals & Software screen (Section 3.7).

10.2 Check Your Versions First

Before downloading anything, find out what you are running.

1. From the home screen, press **Settings**.
2. Read the two version numbers in the lower right corner — the HMI configuration and version, and the main board software version.
3. Compare both against the latest release on the GitHub page.

> **Update only if you are behind —** A machine running current software does not need to be touched. Read the release notes before deciding.

10.3 Downloading and Extracting the Update

1. Open the releases page. The newest release is displayed at the top.
2. Find the **Assets** section of that release.
3. Click the update package — a `.ZIP` file — to download it.
4. Save it to your computer.

Then extract it:

1. Locate the downloaded ZIP file.
2. Right-click it and select **Extract All** or **Unzip**.
3. Open the extracted folder.

Inside you will find:

Item	Contents
Windows	Gross Engineering Software Uploader and instructions for Windows computers
Mac	Gross Engineering Software Uploader and instructions for Mac computers
`.hex` file	Main board firmware
`.TFT` file	Touchscreen (HMI) software

> **Always extract before updating —** The uploader cannot read the update out of a compressed folder.
>
> ⚠ **The release notes say which files to apply —** The `.TFT` updates only the touchscreen. The `.hex` updates only the main board. Each release states whether you need one or both. Applying only one when the release calls for both can leave the two out of sync — a mismatch shows up as values reading 0 or the touchscreen failing to communicate (Section 9.1).

If you are unsure which file to use, contact Gross Engineering before proceeding.

10.4 Updating the Main Board

Use the uploader from the **Windows** or **Mac** folder, whichever matches your computer. Each folder contains its own operating-system-specific instructions.

1. Turn main power **OFF**.
2. Connect a micro-USB cable between the controller and your computer.
3. Open the Gross Engineering Software Uploader.
4. Confirm the correct firmware file is displayed.
5. Press any key when prompted.
6. Wait for the upload to complete.
7. Confirm a **Successful Upload** message appears.



[Figure 10.4a — Micro-USB programming port on the control box]

> **The controller runs on USB power during programming —** Main power stays off throughout. The board is powered through the USB cable, and the press will not move at any point in this procedure.
>
> ⚠ **Do not disconnect during the update —** Removing the USB cable mid-upload can leave the board without usable firmware. Let it finish.

If the update fails, contact support rather than retrying repeatedly.

10.5 Updating the Touchscreen

You will need an SD card with a **FAT32 partition of 32 GB or smaller**. A larger card works — see *Using a card larger than 32 GB* below.

1. Format the SD card as **FAT32**.
2. Copy the supplied `.TFT` file to the card.
3. Confirm the update file is the **only** file on the card.
4. Turn main power **OFF**.
5. Insert the SD card into the touchscreen.
6. Turn main power **ON**.
7. Wait for the update to complete.
8. Turn main power **OFF**.
9. Remove the SD card.
10. Turn main power **ON** and confirm normal operation.

> ⚠ **The update file must be alone on the card —** Any other file on the SD card can cause the update to fail or to load the wrong file.
>
> ⚠ **Mac users — the card is probably not as empty as it looks —** macOS writes hidden files to removable media automatically: `.DS_Store`, `.Spotlight-V100`, `.fseventsd`, `.Trashes`, and `._` companion files alongside anything you copy. Finder does not show them, so a card that appears to hold only the `.TFT` can still fail the update.

Clean the card from Terminal before ejecting it, replacing `CARDNAME` with the card's actual name:

```
dot_clean /Volumes/CARDNAME
rm -rf /Volumes/CARDNAME/.Spotlight-V100 /Volumes/CARDNAME/.fseventsd /Volumes/CARDNAME/.Trashes
/Volumes/CARDNAME/.DS_Store
```

Then eject the card through Finder rather than pulling it out, or macOS may write the files straight back.

> ⚠ **Do not remove power or the card during the update —** Interrupting a touchscreen update can leave the HMI unusable.
>
> **Remove the card when you are done —** If the SD card is left in, the update will run again on the next startup.

Using a card larger than 32 GB

> **You can use a 64 GB or 128 GB card.** You do not need to buy a smaller one. The touchscreen needs a **FAT32** partition of 32 GB or less to read the update from — so you carve one off the front of the larger card, format that partition FAT32, and put the `.TFT` on it. The remaining space is simply ignored by the machine.

This is necessary because Windows will not format any volume larger than 32 GB as FAT32 through File Explorer. The partition has to be created at the right size first, then formatted.

After partitioning, the leftover space on a 64 or 128 GB card can be left unallocated or formatted separately as exFAT for ordinary use. The touchscreen only reads the FAT32 partition.

> ⚠ **Select the correct disk —** These procedures erase everything on the selected device. Confirm the disk number or device name refers to the SD card and not to an internal drive or another attached disk. Disconnect other removable drives first if you are unsure.

Windows

1. Insert the card and open **Command Prompt as Administrator**.
2. Type `diskpart` and press Enter.
3. Type `list disk`. Identify the SD card by its size **and** by the Type column, which reads *Removable* for a card and *Fixed* for an internal drive.
4. Type `select disk N`, where N is the SD card's number. **Confirm this is correct before continuing.**
5. Type `clean`. This erases the card.
6. Type `create partition primary size=30000`. This creates a partition of roughly 29 GB, safely under the limit.
7. Type `format fs=fat32 quick`.
8. Type `assign` to give it a drive letter.
9. Type `exit`.

Copy the `.TFT` file to the new drive and continue from step 3 of the procedure above.

Mac

1. Insert the card and open **Disk Utility**.
2. In the sidebar, press the **View** button and choose **Show All Devices**.
3. Select the **physical card**, not the volume indented beneath it.
4. Press **Partition**.
5. Press **+** to add a partition, set its size to **30 GB**, and set the format to **MS-DOS (FAT)**.
6. Press **Apply**, then **Partition** to confirm.

Copy the `.TFT` file to the new volume, clean the hidden files as described above, and continue from step 3 of the procedure above.

> **Why 30 GB and not 32 —** Card manufacturers and operating systems count gigabytes differently, so a card sold as 32 GB may report slightly over the limit. Sizing the partition at 30 GB avoids the argument entirely.

10.6 If an Update Makes Things Worse

Contact Gross Engineering support first. A release that degraded your machine is something we need to know about — we would rather hear the criticism and fix the release than have you work around it quietly.

You can roll back to a previous release if you need the machine running in the meantime. Every prior release stays available on the GitHub page.

> **Rolling back is a band-aid —** It gets you working again, but it leaves the underlying problem in place, for you and for everyone else on that release. Report it either way.

11. Support

If you are stuck, contact us before proceeding. We would rather answer a question than repair a machine.

> **Have these ready.** Both version numbers from the lower right corner of the Settings menu — the HMI configuration and version, and the main board software version (Section 3.1) — along with your press configuration and a description of what the machine is actually doing.
>
> **Email —** support@bteamengineering.com
>
> **Software, manuals, and release notes —** https://github.com/BteamEngineering/AutoDrive/releases

Tell us when something is wrong. A fault we do not hear about is a fault we cannot fix. That includes updates that made your machine worse, errors that appear without explanation, and anything in this manual that did not match what you found on the bench. Contact Gross Engineering and we will work on a solution for your specific application.

Where to Go Next

Next Step	Document
Install AutoDrive on a different press configuration	The Quick Start Guide for that configuration
Set up your tool head, install and adjust dies, and develop a load	In-Work

Gross Engineering LLC · 301 Stag Industrial Ln · Lake St Louis, Missouri

© Gross Engineering LLC. All rights reserved. This document contains confidential and proprietary information. Do not distribute, reproduce, or share without written permission.