Bulk Primer Collator

BPC

Customer Manual

Rev A

Gross Engineering LLC

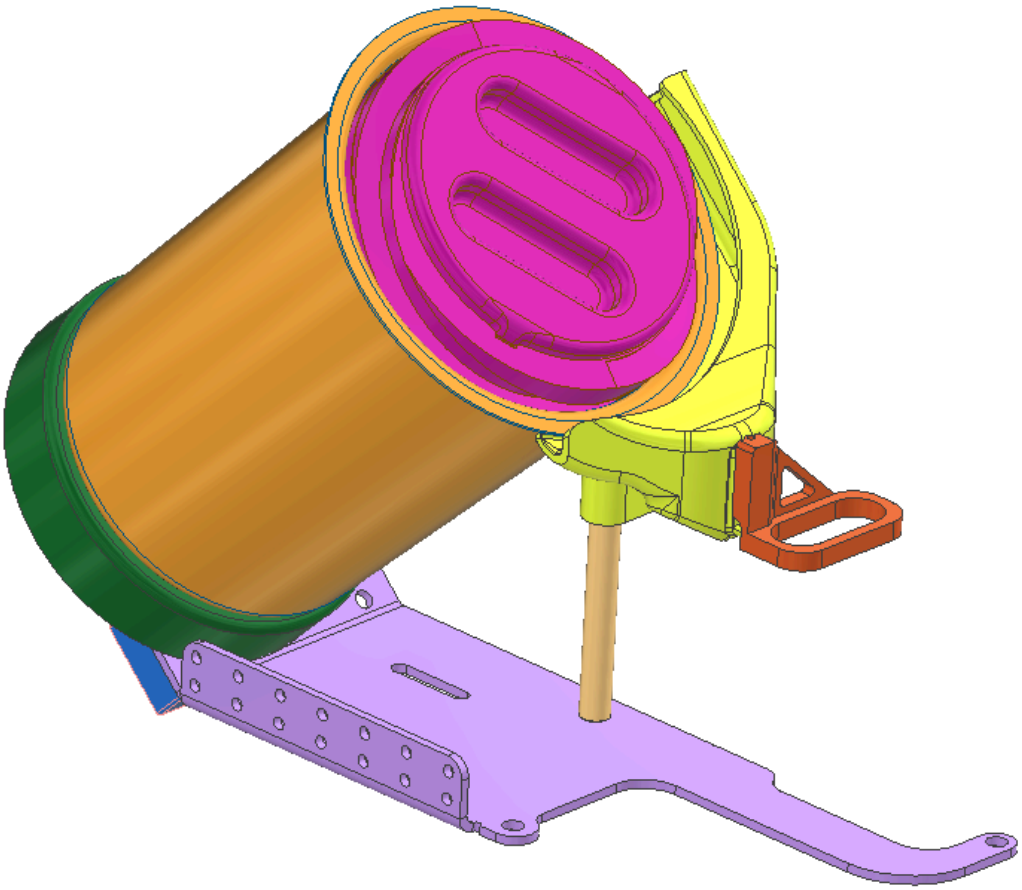

Table of Contents

1. Overview....3
2. What's in the Box....4
3. Before You Begin....5
    Tools Required....5
    Safety....5
4. Installation....5
    4.1 Remove the Mark 7 Blast Shield....5
    4.2 Mount the Base Plate....6
    4.3 Install the Primer Reservoir....7
    4.4 Install the Funnel....7
    4.5 Install the Proximity Sensor Mount....8
5. Electrical Connection & First Power-On....10
    Connections....10
    Power Supply....10
    First Power-On....10
6. Using the Motor Controller....11
    Controls....11
    How It Works....11
    Speed Setting....11
7. Tuning & Setup....12
    7.1 Setting the Proximity Sensor....12
    7.2 Funnel Positioning....13
    7.3 Speed Setting....13
8. Normal Operation....14
    Loading Primers....14
    Running....14
    Clearing a Stoppage....14
    Mechanical....15
    Electrical....15
    Safety....16
10. Maintenance & Replacement Parts....16
    Routine Maintenance....16
    Replacement Parts....17

1. Overview

The Bulk Primer Collator (BPC) is a high-capacity rotary primer dispenser designed to automatically fill vibratory orientation bowls used in progressive reloading presses. The BPC does not orient primers — it bulk-feeds them into your existing orientation bowl at a controlled, sensor-regulated rate.

The internal reservoir holds approximately 8,000 to 10,000 primers. As the unit rotates, a dual-track conveyance system lifts primers from the bottom of the reservoir and deposits them at the top, dispensing 50 to 200 primers per revolution into a funnel that feeds directly into the orientation bowl below. A single M16 inductive proximity sensor monitors the fill level of the orientation bowl and starts or stops the BPC accordingly.

The BPC is designed as a standalone unit — it has its own 12V power supply and no hardwired connection to the press. It mounts to the existing blast shield standoff posts on the Mark 7 Titan and Revolution using the same fastener positions, requiring no additional hardware or permanent modifications.

Safety — Blast-Directed Pressure Vessel Design

The BPC is engineered with primer safety as a core design principle. The reservoir and dispensing system are fully enclosed in a metal shroud designed to direct any detonation event in a controlled, safe direction. The blast isolation cap on the reservoir prevents any detonation from propagating into the bulk primer supply. Primers are dispensed in small, compartmentalized quantities — limiting the exposed volume at any one time.

> **The blast isolation cap must be installed and secured before loading or operating the BPC. Do not operate with the cap removed. Primers are energetic materials — always follow safe handling practices when working with large quantities.**

Key Features

- High-capacity reservoir — approximately 8,000 to 10,000 primers
- Dual-track conveyance — 50 to 200 primers dispensed per revolution
- Standalone 12V operation — no press integration required
- Mounts to Mark 7 Titan and Revolution blast shield standoff posts
- Sensor-driven auto-fill — monitors orientation bowl level via M16 inductive proximity sensor
- Blast-directed metal shroud with compartmentalized dispensing for primer safety
- Reservoir removable for cleaning — two bolts
- Approximately 10" W x 5" D x 14" H

2. What's in the Box

The BPC ships in two main assemblies, both pre-assembled and wired. Inspect all items upon receipt. Contact us immediately if anything is missing or damaged.

Main Mounting Plate Assembly (pre-assembled)

- Main mounting base plate
- AJY-370 12V DC gear motor (installed)
- Motor control board (installed and wired)
- Vertical riser for funnel (installed)
- Dual ball bearing spindle (installed)

Primer Reservoir Assembly (pre-assembled)

- Rotary primer reservoir with blast isolation cap installed

Funnel & Sensor Components

- Dispensing funnel with shroud
- M16 inductive proximity sensor
- Proximity sensor height-adjust mount (slides onto funnel riser)

Power Supply

- 12V switching power supply — compatible with 110V and 220V single-phase
- Plug adapter set (both 110V and 220V adapter plugs included)

⚠ *The power supply accepts both 110V and 220V with the appropriate plug adapter. The adapter slides onto the power supply body. Select the correct adapter for your local voltage before connecting.*

You Will Also Need (Customer-Supplied)

- Mark 7 Titan or Revolution with standard blast shield installed
- Allen key set
- Adjustable wrench

3. Before You Begin

Tools Required

Tool	Use
Allen key set	Grub screws on spindle and funnel; general fasteners
Adjustable wrench	Standoff reinstallation

Safety

- Turn off and unplug your Mark 7 press before beginning installation.
- The blast isolation cap must be installed and secured before loading primers. Do not operate without it.
- Primers are energetic materials. Exercise appropriate caution when handling large quantities.
- Disconnect the BPC power supply before making any adjustments to the motor, wiring, or reservoir.
- The reservoir rotates during operation — keep fingers clear while powered.
- This system operates at 12V DC. Follow standard low-voltage wiring practices.

4. Installation

4.1 Remove the Mark 7 Blast Shield

1. Power off and unplug the Mark 7 press.
2. Loosen and remove the threaded standoffs securing the blast shield above the orientation bowl. Set the blast shield and standoffs aside — the standoffs will be reused.



[Mark 7 blast shield standoff locations — Titan and Revolution]

4.2 Mount the Base Plate

3. Take the BPC main mounting base plate and slide it beneath the orientation bowl, aligning the mounting holes with the existing standoff positions on the Mark 7.
4. Reinstall the threaded standoffs (or standalone bolts) through the top of the base plate and tighten. The base plate should sit below the bottom plate of the orientation bowl — the orientation bowl sits on top.

⚠ *The entire BPC assembly mounts below the orientation bowl base plate. Confirm the base plate is flush and the standoffs are fully tightened before proceeding.*

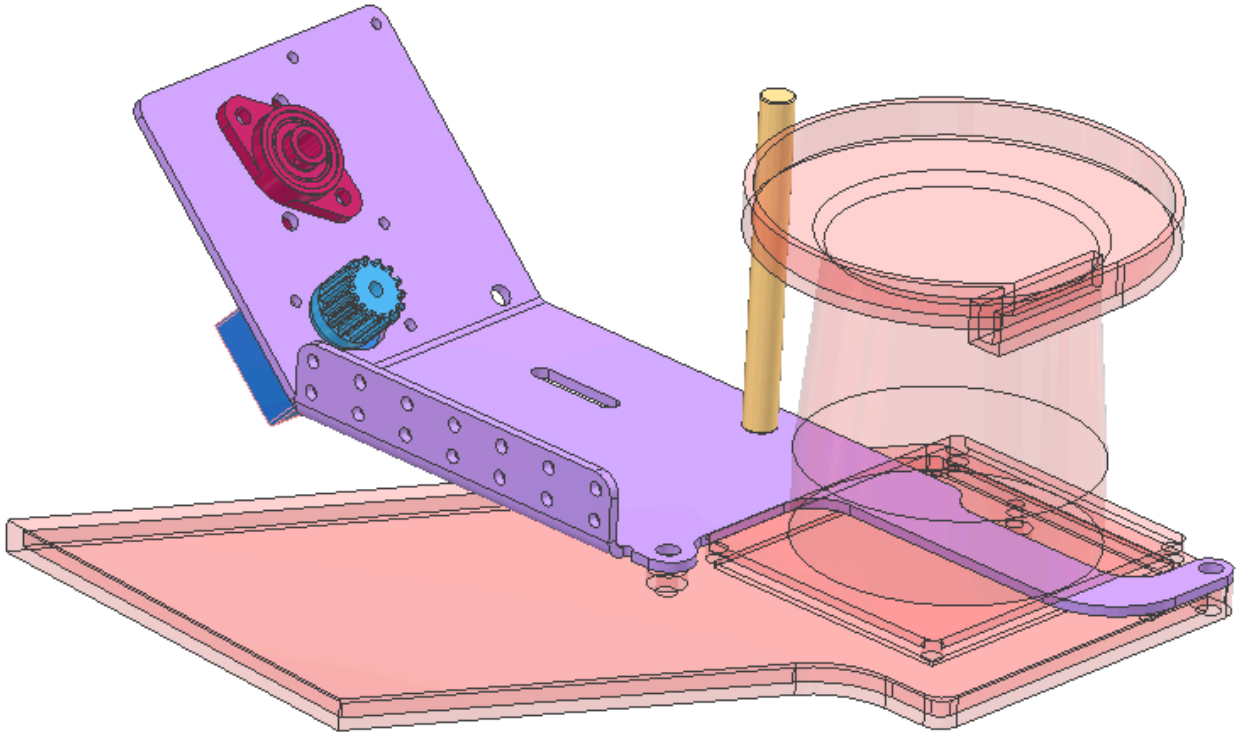

[Base plate installed under orientation bowl, standoffs tightened]

4.3 Install the Primer Reservoir

5. Take the primer reservoir assembly and slide it into the dual ball bearing spindle on the main mounting base plate.
6. Seat the reservoir firmly into the spindle.
7. Using your Allen key, tighten the grub screws on the back of the spindle to secure the reservoir. It should have no play or wobble.

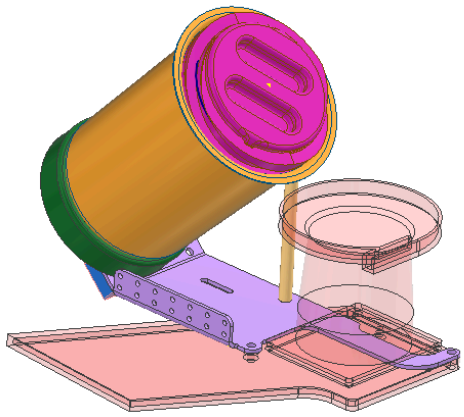

[Reservoir seated in spindle, grub screws tightened]

4.4 Install the Funnel

8. Lift the dispensing funnel and position it over the mouth of the orientation bowl. It should sit snugly without contacting the bowl walls.
9. Tighten the funnel grub screw on the vertical riser to secure it in place.

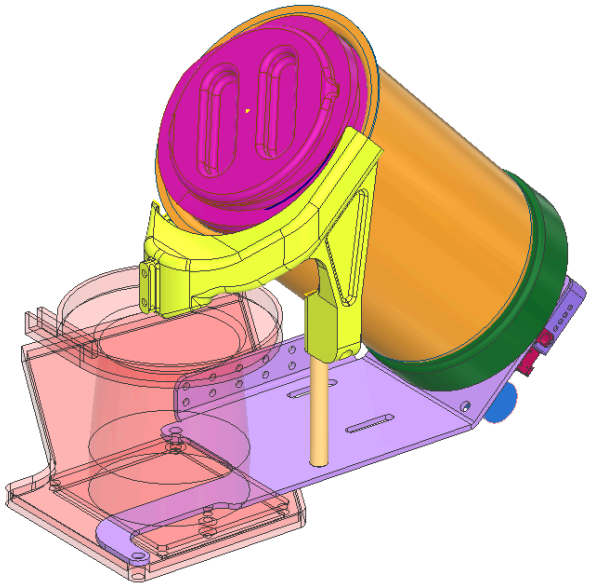

[Funnel positioned over orientation bowl mouth]

4.5 Install the Proximity Sensor Mount

10. Slide the proximity sensor height-adjust mount onto its mating receiver on the front of the funnel riser.
11. The mount can be adjusted up or down along the riser using its set screw — leave this loose for now. Final height is set during tuning in Section 7.
12. The M16 inductive proximity sensor can also be shifted inboard and outboard within the slot on the mount. Loosely position it pointing into the orientation bowl.
13. The sensor height on its threaded body can be adjusted by loosening its lock nuts and sliding it up or down. Set this during tuning as well.

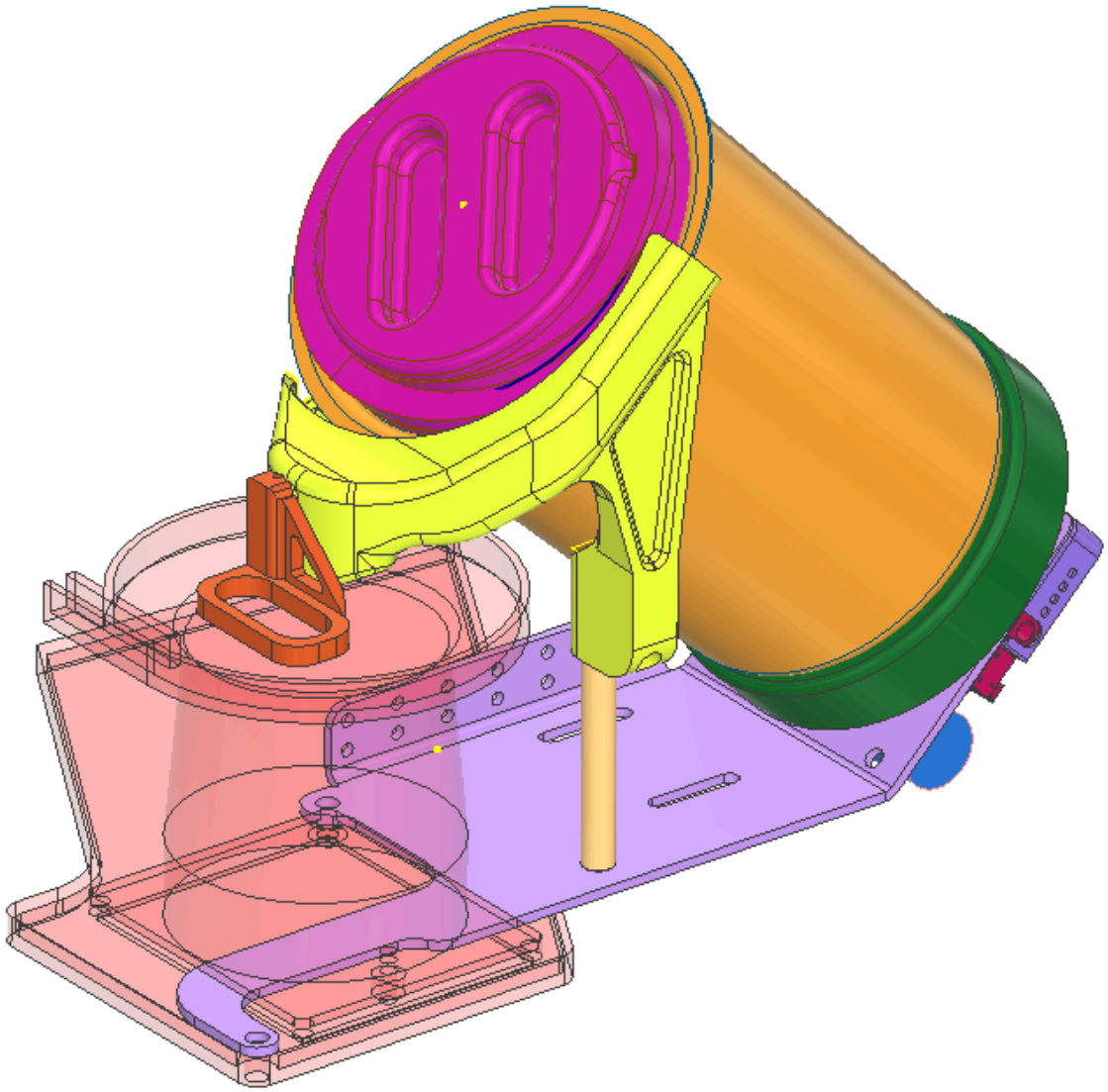

[Sensor mount installed on funnel riser, sensor pointing into bowl]

5. Electrical Connection & First Power-On

Connections

All wiring is pre-terminated and routed at the factory. Connect leads to the clamping terminal block on the control board by inserting each wire and tightening the clamp screw. Wire colors are unique for each connection.

Motor Wiring

Wire Color	Terminal
Black	Motor +
Red	Motor −

> ⚠ *Motor polarity is intentionally reversed from standard. Black connects to Motor + and Red to Motor − to achieve the correct rotation direction. Do not swap these.*

Inductive Proximity Sensor Wiring

Wire Color	Terminal
Brown	Sensor +
Blue	Sensor −
Black	Sensor signal

Route all cables away from the rotating reservoir before powering on.

Power Supply

Select the correct plug adapter for your local voltage (110V or 220V) and slide it onto the power supply body until it clicks. Connect the barrel connector to the BPC control board.

First Power-On

14. Confirm all wires are fully seated and no cables are near the rotating reservoir.
15. Confirm the blast isolation cap is installed on the reservoir.
16. Set the speed dial to minimum (fully counterclockwise).
17. Plug in the 12V power supply.
18. Slowly increase the speed dial. The reservoir should begin rotating smoothly.
19. If the motor does not spin or the board has no power, disconnect immediately and refer to Section 9 (Troubleshooting).

6. Using the Motor Controller

The BPC controller is intentionally simple — there are no menus or parameters to configure.

Controls

Control	Function
Power switch	Turns the system on/off
Speed dial	Adjusts reservoir rotation speed — clockwise to increase, counterclockwise to decrease

How It Works

The BPC is sensor-driven. The M16 inductive proximity sensor monitors the fill level of the orientation bowl. When the bowl drops below the sensor threshold, the BPC motor runs and feeds primers. When the bowl reaches the sensor threshold, the motor stops. No user input is required during normal operation.

Speed Setting

The BPC does not need to run at high speed. Each revolution dispenses 50 to 200 primers via the dual-track conveyance system. Start at a low speed and increase only as needed. Running at excessive speed does not significantly increase output and adds unnecessary wear.

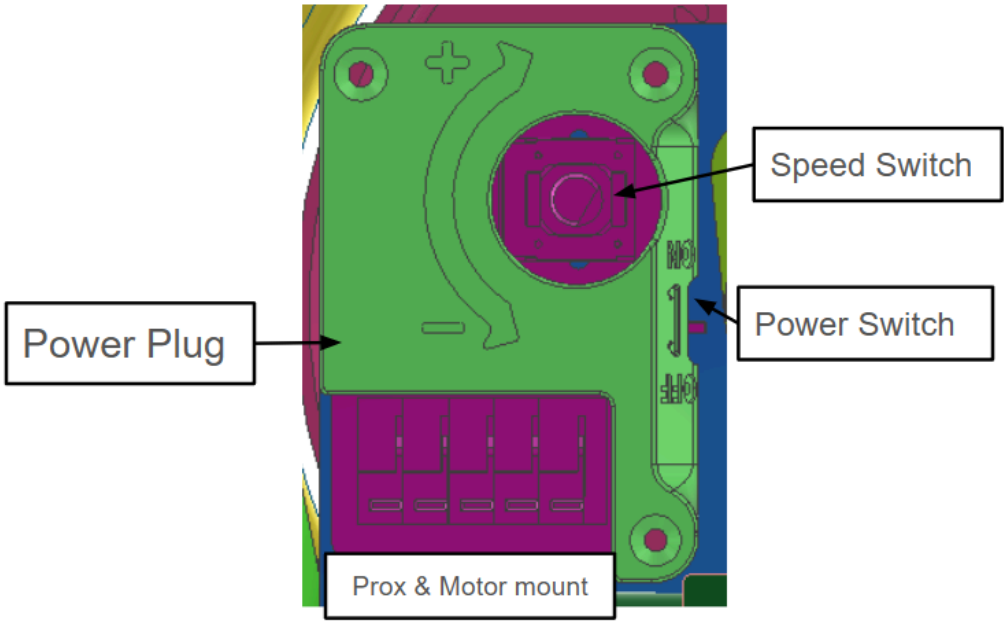

[Controller with switch and dial labeled]

7. Tuning & Setup

The primary tuning task for the BPC is positioning the proximity sensor so it correctly reads the orientation bowl fill level. Speed and funnel positioning are secondary adjustments.

7.1 Setting the Proximity Sensor

The M16 inductive proximity sensor determines when the BPC runs and when it stops. Position it so it detects the primer level in the orientation bowl at the fill point you want to maintain.

Sensor Adjustment Points

Adjustment	How	Effect
Mount height on riser	Loosen set screw, slide mount up or down, retighten	Raises or lowers the entire sensor assembly
Sensor height on body	Loosen lock nuts, slide sensor up or down, retighten	Fine-adjusts detection range within the bowl
Inboard/outboard position	Slide sensor in its slot	Adjusts how far the sensor reaches over the bowl

The red indicator light on the back of the sensor shows its current state:

Indicator Light	Status
Red ON	Bowl below threshold — motor running
Red OFF	Bowl at threshold — motor stopped

During setup, adjust the sensor position and verify it responds correctly as the primer level in the bowl rises and falls. The goal is a consistent start/stop response at the desired fill level.

> ⚠ *If the sensor is too sensitive or triggers inconsistently, try adjusting the inboard/outboard position so it reads a more stable section of the primer bed.*

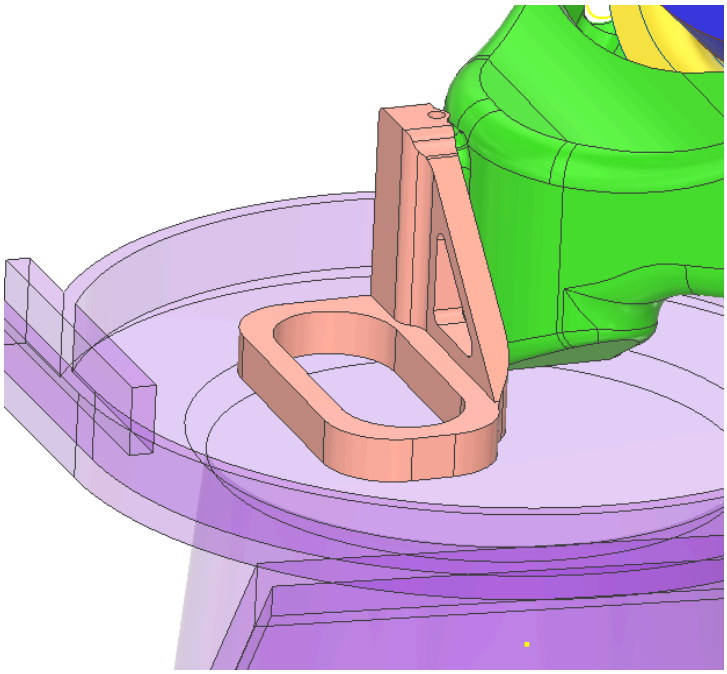

[Sensor adjustment points labeled on mount and riser]

7.2 Funnel Positioning

The funnel should sit over the orientation bowl mouth without contacting the bowl walls. It should channel primers directly into the bowl. If primers are landing outside the bowl or the funnel is vibrating, adjust position and retighten the grub screw.

7.3 Speed Setting

Start at a low speed. The dual-track system delivers plenty of primers per revolution — increase speed only if the bowl is consistently running low between fill cycles. Running faster than necessary does not improve performance and increases wear.

8. Normal Operation

Loading Primers

⚠️ **Always confirm the blast isolation cap is installed and secured before loading primers.**

20. Remove the primer reservoir from the spindle by loosening the spindle grub screws and lifting it clear.
21. Open or remove the blast isolation cap and pour primers into the reservoir.
22. Reinstall the blast isolation cap securely.
23. Slide the reservoir back into the spindle and tighten the grub screws.

⚠ *The inner volume can be loaded while the BPC is not running. You do not need to power down the Mark 7 press to add primers to the reservoir.*

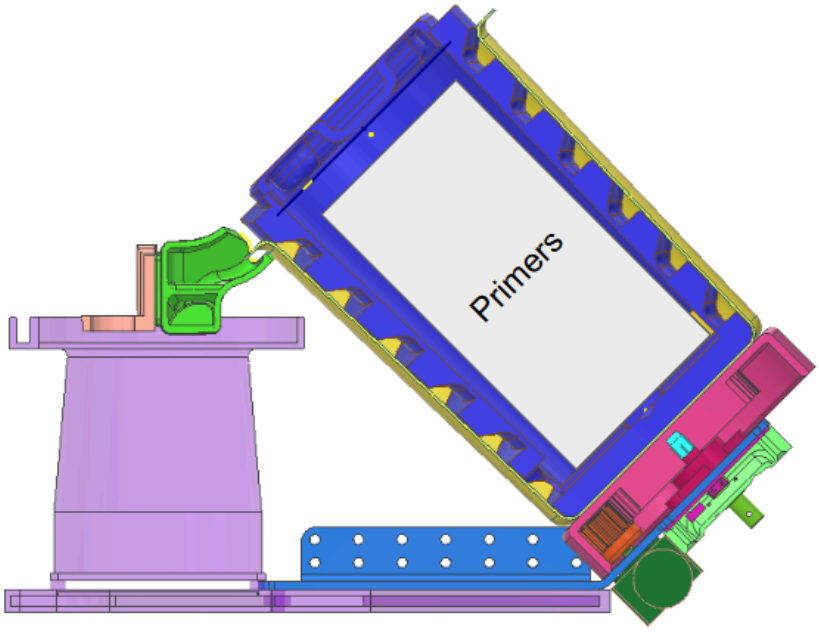

[Reservoir being loaded with primers, cap reinstalled]

Running

Once loaded and powered on, the BPC runs automatically. The motor starts and stops based on the proximity sensor reading the orientation bowl level. Monitor the reservoir periodically and refill as needed. The reservoir holds approximately 8,000 to 10,000 primers — most sessions will not require a mid-run refill.

Clearing a Stoppage

If primers jam or bridge inside the reservoir and the motor cannot overcome the blockage, power off immediately. Remove the reservoir from the spindle and manually dump the contents to clear the obstruction. Inspect the dispensing track before reloading.

9. Troubleshooting

Mechanical

Reservoir does not rotate — motor is running

The drive gear on the motor shaft is slipping and needs to be replaced. Power off and inspect the gear for wear or damage. See Section 10 for replacement parts.

Spindle grub screws will not hold reservoir

Inspect the grub screw threads and reservoir shaft for damage. Replace worn grub screws with matching hardware. If the reservoir shaft is damaged, contact Gross Engineering LLC.

Funnel shifts or falls out of position

The funnel grub screw has loosened. Re-position the funnel over the bowl mouth and retighten.

Primers jamming in the dispensing track

Reduce the speed dial. If jamming continues, clear the track manually, inspect for debris or deformed primers, and restart at a lower speed.

Massive stoppage — motor cannot clear it

Power off. Remove the reservoir from the spindle and manually dump the contents to clear the blockage. Do not attempt to force the motor through a stoppage.

Electrical

Motor does not run — proximity sensor red light is on

Power is reaching the board. Check that all motor wires are fully seated in the terminal block. If seated correctly, check for a physical obstruction preventing the reservoir from rotating and clear it before powering on again.

Reservoir rotates in the wrong direction

Swap the black and red motor wires on the terminal block to reverse polarity.

No power to the board

Confirm the barrel connector is fully seated. Verify the correct plug adapter is attached for your supply voltage. If the connection is secure and the board remains unpowered, replace the power supply or the control board — see Section 10.

Proximity sensor not triggering correctly

Check that the sensor red light responds when you manually cover the sensor face. If the light does not change, check the sensor wiring at the terminal block. If wiring is correct and the sensor does not respond, replace the sensor — see Section 10.

Safety

⚠ **Do not operate without the blast isolation cap installed. The cap is a critical safety component. Operating without it removes the compartmentalization that prevents mass detonation from propagating into the reservoir.**

10. Maintenance & Replacement Parts

Routine Maintenance

Primer dust accumulates inside the reservoir over time. Periodic cleaning prevents buildup that can impede rotation or contaminate primers.

Cleaning Procedure

24. Power off and disconnect the power supply.
25. Remove the reservoir from the spindle.
26. Dump any remaining primers manually.
27. Wash the reservoir with warm water and allow to dry completely before reinstalling.
28. Inspect the dispensing track and funnel for residue and wipe clean.
29. Reinstall only when fully dry. Moisture inside the reservoir can damage primers.

Replacement Parts

Gross Engineering LLC believes in right to repair. All serviceable components can be sourced independently.

Motor

- AJY-370 / JGY-370 12V DC gear motor
- Search "JGY-370 12V gear motor" on Amazon — match voltage and RPM to original
- Note reversed wiring polarity: Black → Motor +, Red → Motor −

Inductive Proximity Sensor

- M16 cylindrical inductive proximity sensor, NPN NC
- Search "M16 NPN NC inductive proximity sensor" on Amazon
- Confirm NPN normally-closed configuration
- Wire colors: Brown (+), Blue (−), Black (signal)

Power Supply

- 12V switching power supply with 110V/220V compatibility
- Search "12V switching power supply" on Amazon
- Must include or accept adapter plugs for your local voltage

Funnel, Reservoir & Orientation Components

- 3D printed components are manufactured in ASA
- STL files available from Gross Engineering LLC GitHub repository [link TBD]

Control Board

- Available direct from Gross Engineering LLC
- Contact: n.gross@gro-eng.com