

User Manual: Primer Filler

Prepared By:
Nicholas J. Gross, P.E. (Founder)
Gross Engineering LLC
215 Barrington Ridge Lane
Wentzville, Missouri

Revision: C.1
Date: 2026-1-15

Table of content

1. Safety and Liability Notice **3**
2. Limited Warranty **4**
3. Right to Repair and Digital File Policy **5**
4. System Overview and Operating Theory **6**
5. Unboxing and Initial Inspection **6**
6. Install the Primer Bowl **8**
6.1 Install the Orientation Bowl (Do This First) 8
6.2 Remove Factory Primer Parts 9
6.3 Install the Lower Base Shim 10
6.4 Mount the Primer Bowl System 10
6.5 Install the Side Lower Shield 11
6.6 Set the Proximity Sensor 12
6.7 Align the Motor Sprocket 13
6.8 Check for Interference 13
7. Power On and First Test **14**
7.1 Connect Power 14
7.2 Add Primers 15
7.3 Check Automatic Stop 15
7.4 Normal First-Run Behavior 15
8. Normal Operation and Tuning **16**
8.1 Primer Variations 16
8.2 Recommended Speed 16
8.3 Bottom Chute Behavior 16
8.4 Switching Primer Types or Running Empty 16
If you are changing primer types or finishing a batch: Turn the system off. Watch the final 10 to 15 primers feed through the system. Monitor for orientation errors during this time. 16
8.5 Manual Operation 16
9. Maintenance **17**
9.1 The Primer Bowl System requires very little maintenance. 17
9.2 Primer dust can build up inside the bowl over time. 17
10. Troubleshooting **18**
10.1 System Turns On but Bowl Does Not Move 18
10.2 Bowl Does Not Stop When Primers Reach the Sensor 19
10.3 Primers Jamming at the Top (Input Ramp) 19
10.4 Primers Not Feeding at the Bottom Chute 20
10.5 Primers Collide with Primer Pocket (Shim Missing) 20
10.6 Primers Flipping Frequently 20
Appendix A – Exploded View **22**
Appendix B – Components **23**
Appendix C – Electrical Break Out **24**
Appendix D – Support Ticket **25**

1. Safety and Liability Notice

The Gross Engineering Primer Bowl System is designed to automate the feeding of small arms primers into compatible ammunition loading equipment. Small arms primers contain impact-sensitive explosive compounds and must be handled with care at all times. Improper handling, contamination, excessive force, static discharge, misuse, or operation outside of established ammunition reloading practices may result in unintended primer ignition. Primer ignition may cause personal injury, property damage, or death.

Gross Engineering LLC has designed this system with features intended to mitigate the risk of mass detonation, including mechanical isolation between primers during feed, controlled feed geometry, and an integrated blast shield. These measures are intended to reduce the likelihood of propagation in the event of a primer ignition; however, no mechanical or electrical system can eliminate the inherent hazards associated with explosive components. The handling of primers remains an activity involving inherent risk.

The safe installation, operation, and maintenance of this equipment are solely the responsibility of the user. The operator is expected to follow established ammunition reloading safety practices at all times. Appropriate eye protection must be worn when handling primers or operating the system. The operating environment must be kept clean and free of debris, powder residue, oil, or other contaminants that could interfere with proper function. Power must be disconnected prior to performing adjustments, maintenance, or service. The user is responsible for verifying correct installation and proper system operation before operating the equipment at production speeds.

This product is intended solely for feeding commercially manufactured small arms primers within compatible reloading systems. It is not intended for use with damaged, altered, or suspect primers, nor is it intended for applications outside of ammunition reloading. Any modification, alteration, electrical bypass, mechanical change, or use outside the intended operating parameters transfers all responsibility and liability to the modifying party.

To the maximum extent permitted by law, Gross Engineering LLC shall not be liable for personal injury, property damage, loss of production, incidental damages, consequential damages, or indirect losses arising from misuse, improper installation, unauthorized modification, negligence, or operation outside the intended scope of use. Use of this product constitutes acknowledgment and acceptance of these terms.

2. Limited Warranty

Gross Engineering LLC warrants to the original purchaser that the Primer Bowl System shall be free from defects in materials and workmanship under normal and intended use for a period of one (1) year from the date of purchase. This Limited Warranty applies only to the original purchaser and is non-transferable.

For clarity, warranty coverage is defined as follows:

1. **Electronic Components – One (1) Year**
   All electronic components supplied with the system, including control boards, motors, sensors, wiring harnesses, and associated electrical assemblies, are warranted for a period of one (1) year from the date of purchase.

2. **Additively Manufactured (3D Printed) Components – One (1) Year**
   All 3D printed components supplied as part of the system are warranted for a period of one (1) year from the date of purchase against failure under normal operating conditions.

3. **Metallic and Structural Components – One (1) Year Against Defects**
   Sheet metal and metallic structural components are designed for durability and are not considered consumable items. These components are warranted for a period of one (1) year against defects in material or workmanship under normal use.

This Limited Warranty does not cover damage resulting from misuse, improper installation, electrical modification, mechanical alteration, over-voltage conditions, environmental contamination, impact damage, unauthorized repair attempts, removal or bypassing of safety systems, or operation outside intended parameters.

Gross Engineering LLC reserves the sole right to determine whether a claimed defect is covered under this Limited Warranty.

During the warranty period, Gross Engineering LLC will repair or replace defective components at its discretion. Gross Engineering LLC will cover the cost of shipping warranty-approved replacement components to the customer and will also cover the cost of return shipping for approved warranty claims. This shipping coverage applies only to warranty-approved defects and does not apply to non-warranty service, misuse, or customer-induced damage.

Following expiration of the warranty period, replacement parts and electronic components may be purchased as spare parts.

3. Right to Repair and Digital File Policy

Gross Engineering LLC supports the right of equipment owners to maintain and repair their purchased systems. Consistent with this position, Gross Engineering LLC may, at its sole discretion, furnish STL or other digital design files for select additively manufactured (3D printed) components for the purpose of user-fabricated replacement or cosmetic modification.

Provision of digital files is intended solely to enable repair or aesthetic modification of a legitimately purchased Gross Engineering product. Furnishing such files does not transfer ownership of intellectual property, design rights, manufacturing rights, licensing rights, or any proprietary interest to the recipient. All digital files, models, geometries, and associated design data remain the sole and exclusive property of Gross Engineering LLC.

Recipients of digital files are granted a limited, non-transferable, non-exclusive license to use such files strictly for personal repair or maintenance of their originally purchased equipment. Redistribution, resale, replication for commercial purposes, reverse engineering for competitive manufacturing, public posting, or sharing of digital files in any format is strictly prohibited.

Gross Engineering LLC assumes no responsibility for dimensional accuracy, material selection, print quality, performance, or safety of user-manufactured components. Components fabricated by the user are not covered under the Limited Warranty and may affect system alignment, integration, or operational performance.

Gross Engineering LLC reserves the right to refuse the distribution of digital files to any individual or entity if, in its sole judgment, there is reason to believe such files may be used for redistribution, fraudulent activity, competitive reproduction, malicious intent, or any use inconsistent with the intended purpose of repair and maintenance.

Nothing in this section shall be construed as transferring ownership of intellectual property or granting any manufacturing or commercial rights beyond those expressly stated.

4. System Overview and Operating Theory

The Gross Engineering Primer Bowl System replaces traditional primer tubes with a bowl-fed, sensor-controlled design. Primers are loaded into the bowl and guided through an isolated feed path to the press. An integrated sensor automatically maintains primer level at the pickup point, improving efficiency while reducing stacked primer column length.

5. Unboxing and Initial Inspection

Before opening the box, inspect the outside for severe crushing, water damage, punctures, or signs of rough handling. If the box appears heavily damaged, take photos before opening. Open the box carefully and remove all items. Place everything on a clean table. Do not discard packaging materials until inspection is complete. Your shipment should include:

- Fully assembled Primer Bowl Assembly
- Orientation Bowl (matched to the primer size selected)
- Switching Power Supply (US and EU compatible)
- Small hardware bag or taped components including:
    - Side Lower Shield
    - Lower Base Shim
    - Retention Bolt

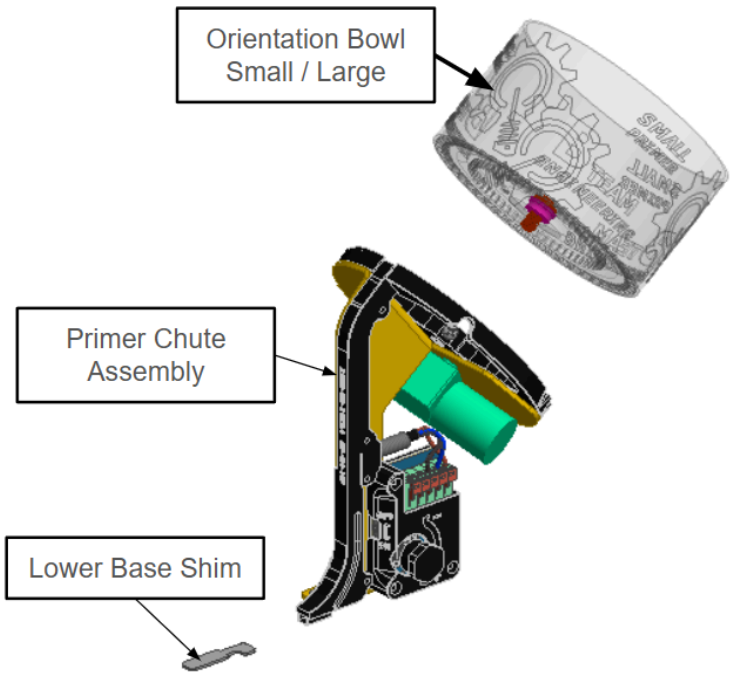

Inspect all components carefully.

Look for cracked 3D printed parts, bent metal, loose wiring, broken connectors, or missing hardware. Shipping vibration may loosen fasteners. Check all visible bolts and screws for tightness. Gross Engineering does not use thread-locking compounds so that future maintenance can be performed easily. If any part is missing, cracked, broken, or damaged, stop and contact Gross Engineering by email with photos of the issue before proceeding. If all items are present and undamaged, proceed to Installation.

6. Install the Primer Bowl

Turn off and unplug your press before starting.

6.1 Install the Orientation Bowl (Do This First)

Do this on the bench before mounting to the press.

1. Take the correct Orientation Bowl for your primer size.
2. Place it into the Primer Bowl Assembly.

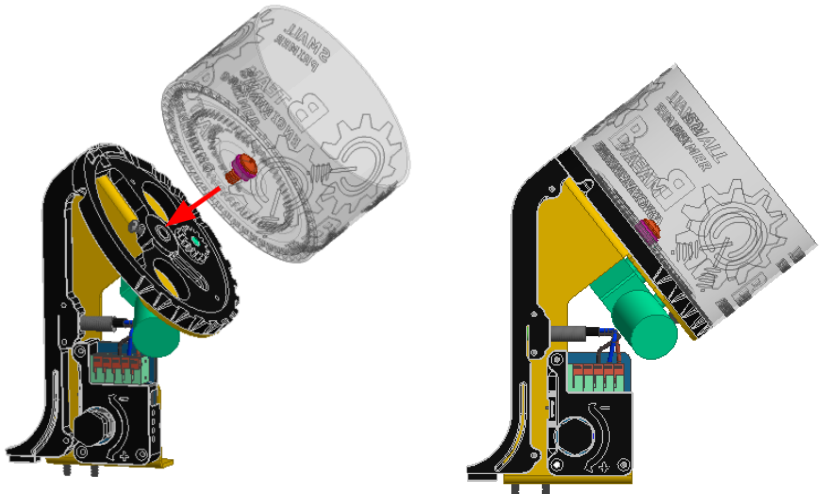

3. Make sure it sits all the way down.
4. Tighten the side grub screw.

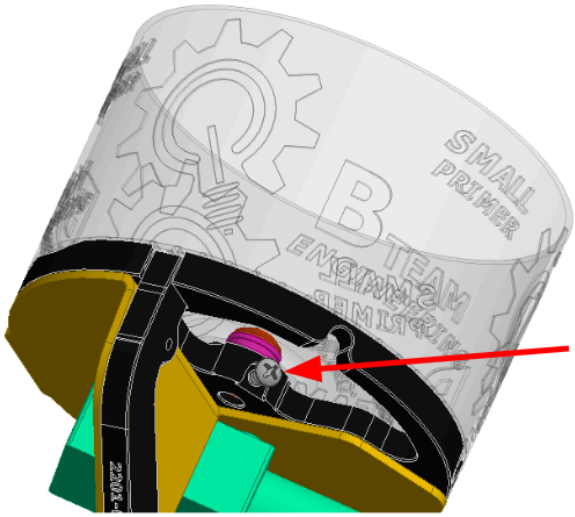

5. Tighten until snug. Do not overtighten.
6. Check that the bowl does not move or wobble.

6.2 Remove Factory Primer Parts

1. Remove the factory primer tube, Rear Plate, and Primer Chute Insert

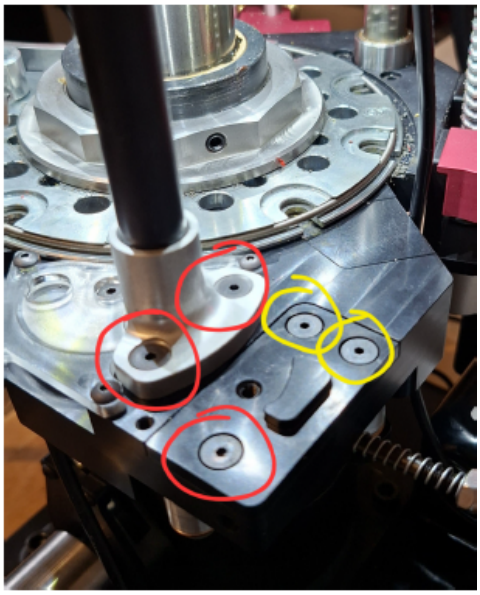

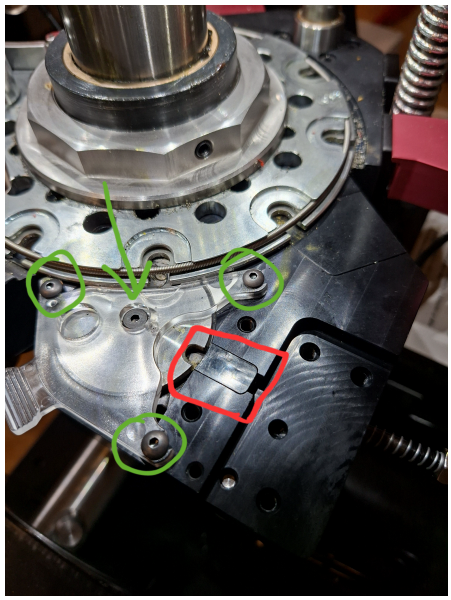

2. Remove the factory primer cover if needed.
3. Remove the clear cover over the primer wheel if needed.
4. Remove the primer wheel axle if required for access.
5. Finished Mark7 primer shuttle assembly should resemble the following.

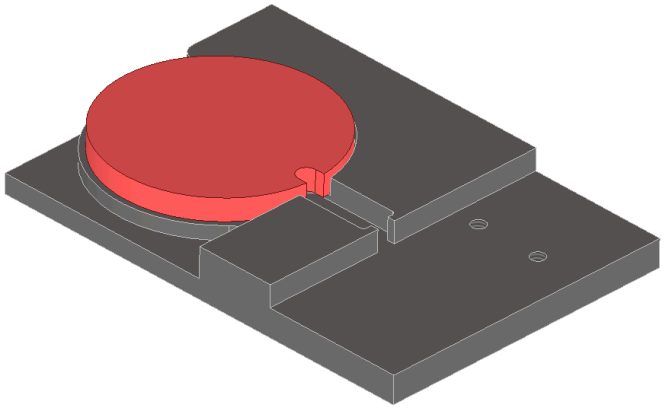

6.3 Install the Lower Base Shim

1. Place the Lower Base Shim in position.

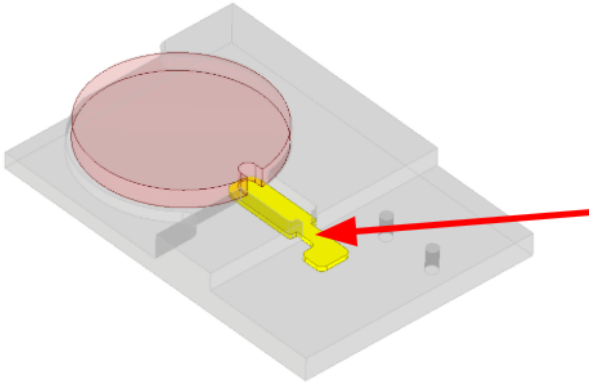

2. Make sure it sits flat, and full forward within the slot.

6.4 Mount the Primer Bowl System

1. Place the Primer Bowl System onto the press, and Line up the mounting holes.

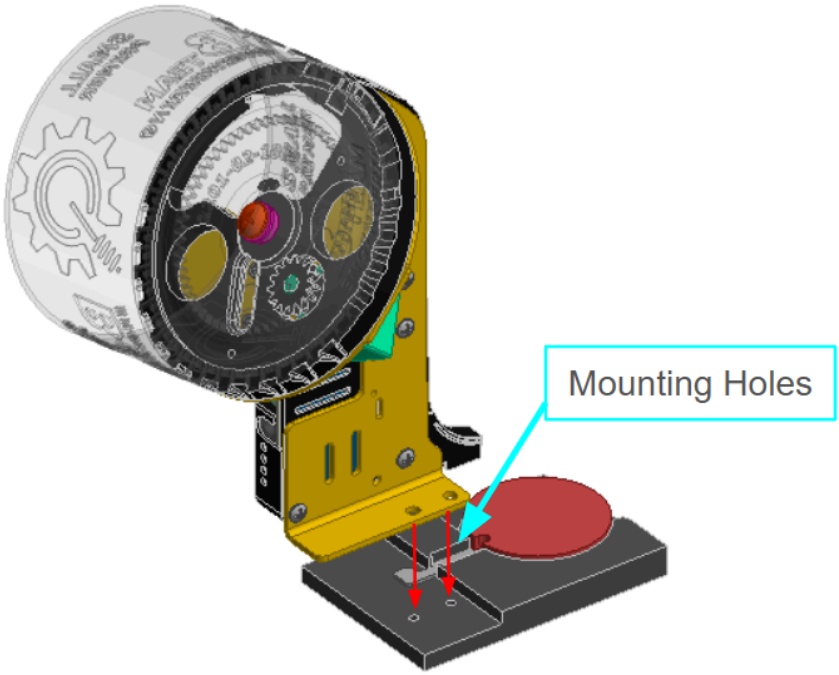

2. Install the mounting bolts.

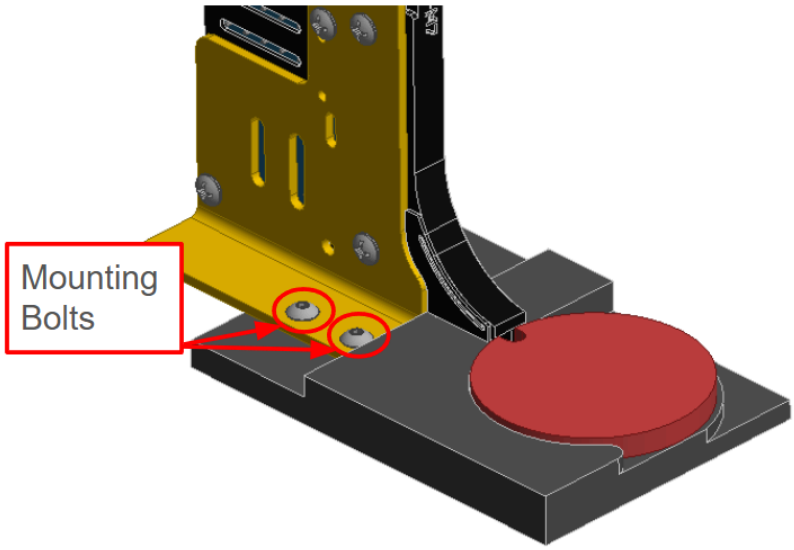

3. Lightly tighten all bolts first.
    a. All mounting holes are intentionally oversized to allow alignment adjustment. If the system does not sit perfectly, loosen the bolts slightly, shift the assembly for best fit, then retighten evenly.
5. Tighten bolts until snug. Do not overtighten.

The system should sit flat and not rock atop the mark7 primer system

6.5 Install the Side Lower Shield

1. Attach the Side Lower cover.
2. There is only one orientation that allows for no contact with the index shuttle.

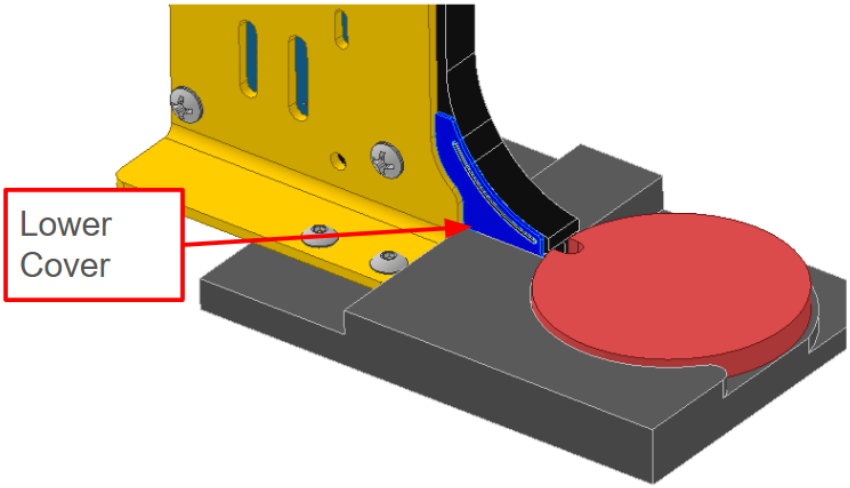

6.6 Set the Proximity Sensor

The inductive proximity sensor must be pushed fully forward.

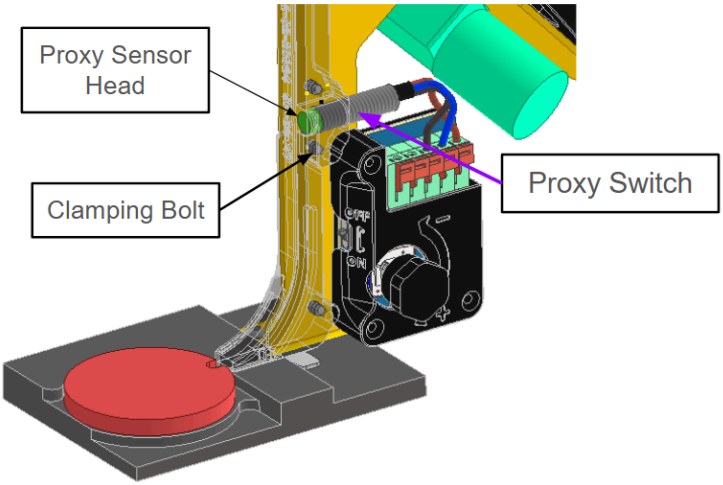

1. Loosen the sensor clamp.
2. Push the sensor forward until it reaches a hard stop.
3. Hold it in position.
4. Tighten the clamp screw.

The sensor should be fully forward against its internal stop.

6.7 Align the Motor Sprocket

1. Check that the motor sprocket aligns with the driven sprocket.
2. Adjust position if needed.
    a. Loosen both M3 screw that hold the motor

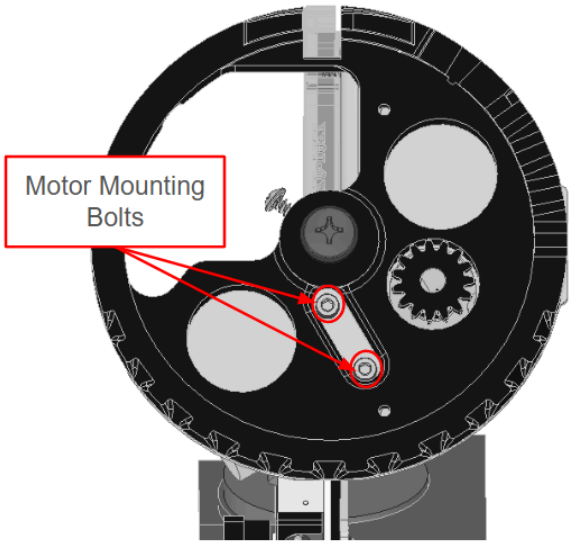

    b. Adjust motor away from gear mesh.
3. Tighten the set screws once aligned.

6.8 Check for Interference

1. Slowly move the press by hand.
2. Watch all moving parts.
3. Make sure nothing rubs or hits.

If anything touches or binds, stop and adjust before turning on power.

7. Power On and First Test

7.1 Connect Power

Use the provided 12 Volt 2 Amp power supply. This power supply works in US, EU, and Australian power zones.

1. Plug the power supply into your wall outlet (110V or 220V).
2. Plug the barrel connector into the Control Board.

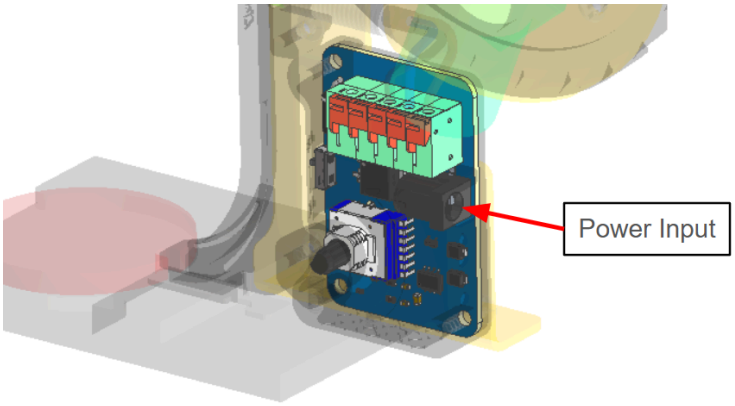

The Control Board has:

- An ON/OFF switch
- A speed control knob (potentiometer)

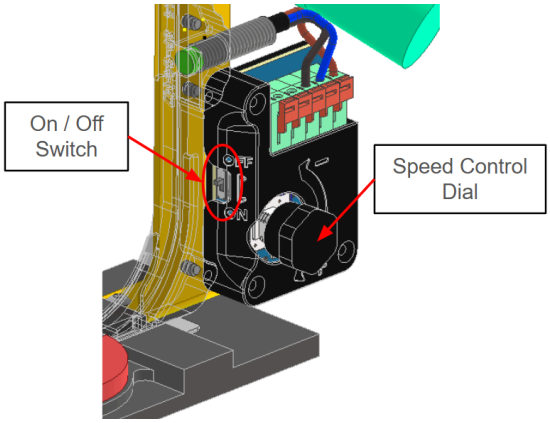

Turn the switch to ON. Turn the speed knob all the way counterclockwise to the lowest setting. Slowly turn the knob clockwise. The bowl should begin to rotate. If the bowl does not turn or move: Stop. Go to the Troubleshooting section.

7.2 Add Primers

If the bowl is rotating correctly:

1. Turn the speed to a slow setting.
2. Add 10 to 20 primers into the bowl.
3. Watch the primers move and orient.

Primers should move smoothly through the track. If primers jam, flip excessively, or do not feed: Go to the Troubleshooting or Tuning section.

7.3 Check Automatic Stop

Allow the system to fill the primer stack. The system should stop automatically when primers reach the sensor. Sensor Details: The inductive proximity sensor has:

- A green sensing head
- A yellow LED on the rear
    - Yellow Light ON = No primer detected
    - Yellow Light OFF = Primer detected
- When a primer reaches the sensor, the bowl should stop and the yellow light should turn OFF.
- If the system does not stop:
    1. Make sure the sensor is pushed fully forward.
    2. Retest.

If it still does not stop: Go to the Troubleshooting section.

7.4 Normal First-Run Behavior

The first primer may move quickly down the chute and flip at the bottom. This is normal during the first startup. This is acceptable. The system works best when the bowl stays partially full. Do not run the bowl completely empty during normal use. If you see frequent flipped primers during operation: Go to the Tuning or Troubleshooting section.

8. Normal Operation and Tuning

The system is designed to hold approximately 300 to 800 primers. You may run fewer or more, but the system performs best when the bowl is partially full. Do not run the bowl completely empty during normal use.

8.1 Primer Variations

Primers are very small components. Different brands use different manufacturing methods. The same brand may vary between production lots. Because of this, minor orientation errors can occur. Gross Engineering has tested many primer brands and types. It is not possible to guarantee zero orientation errors. As a general guideline: If you see 1 flipped primer in 100 to 300 primers, this is considered normal variation. If errors occur frequently or continuously, go to the Troubleshooting section.

8.2 Recommended Speed

The system is designed to keep up with high-speed operation. Running at maximum speed is not recommended for normal use. For best results: Run the system at a mid-speed setting. Increase speed only as needed. Find the speed that matches your press and operating style.

8.3 Bottom Chute Behavior

The system is not designed to reliably feed the final 2 to 3 primers at high speed. This is normal. There is not enough weight in the chute to push the last primers into the disk consistently. Keep the bowl partially full during operation for best results.

8.4 Switching Primer Types or Running Empty

If you are changing primer types or finishing a batch: Turn the system off. Watch the final 10 to 15 primers feed through the system. Monitor for orientation errors during this time.

8.5 Manual Operation

The system is optimized for steady, automated operation. If you are manually cycling your press, the system will still function. Performance is most consistent during steady operation.

9. Maintenance

9.1 The Primer Bowl System requires very little maintenance.

From time to time, check that all screws and bolts are tight. Vibration during operation can slowly loosen hardware. Inspect the mounting bolts, the Orientation Bowl grub screw, the sensor clamp, and the motor sprocket set screws. Tighten as needed, but do not overtighten.

9.2 Primer dust can build up inside the bowl over time.

This is normal. To prevent buildup, clean the bowl and track occasionally. Turn the system off and remove all primers before cleaning. Use compressed air or pressurized CO2 to blow out dust. You may also use a lightly damp cloth to wipe surfaces. Do not soak the system or use excess liquid.

9.3 The bearing inside the Orientation Bowl rides on the base plate below it. Over time, plastic buildup at this surface may cause a squealing noise. If this happens, apply a very small amount of oil or grease at the contact surface. Do not use too much.

9.4 If a motor wire becomes damaged, it can be re-solder. The control board uses clamp-style terminals. If wiring needs adjustment, power off the system, loosen the clamp, adjust the wire, and retighten.

Outside of basic cleaning and inspection, the system is designed to operate with minimal maintenance.

10. Troubleshooting

If the system is not operating correctly, use the guide below.

10.1 System Turns On but Bowl Does Not Move

Step 1 – Check Basic Power

- Make sure the power supply is plugged into the wall.
- Make sure the power supply is plugged into the control board.

- Make sure the control board switch is ON.
- Turn the speed knob to the middle position.

If the bowl does not move, continue.

Step 2 – Check Motor Wiring Inspect the wires from the motor to the control board. Make sure:

- Wires are fully inserted into the clamp terminals.
- No wires are loose.
- No insulation is caught in the terminal.

If needed:

- Power off the system.
- Remove the motor wires.
- Strip the wire slightly if needed.
- Reinsert and tighten the clamp.

Test again. If the bowl still does not move, continue.

Step 3 – Confirm Board Power

Look at the proximity sensor. The yellow light on the back of the sensor should be ON when nothing is in front of it. If the light is OFF and nothing is blocking the sensor, the board may not be receiving power. If the sensor light works normally and the bowl still does not move, continue.

Step 4 – Check for Mechanical Binding Inspect the bowl and drive system. Check for:

- Primers jammed in the track
- Loose fasteners blocking movement
- Motor sprocket misalignment
- Motor shifted into the gear path
- Anything rubbing or binding

Rotate the system by hand to confirm it moves freely. If binding is found, correct it and test again. If no binding is found and the bowl still does not move, continue.

Step 5 – Isolate the Sensor Signal Power off the system. Remove the black wire from the sensor input terminal labeled “S” or “Signal” on the control board. Power the system back on and test. If the bowl still does not move: The motor or control board may have failed. Stop and contact Gross Engineering.

10.2 Bowl Does Not Stop When Primers Reach the Sensor

If the bowl keeps running and overfills, check the following.

Step 1 – Check Sensor Position Loosen the sensor clamp. Push the proximity sensor fully forward until it hits the hard stop. Retighten the clamp. Run the system at low speed and test again. If the bowl now stops correctly, the issue was sensor position. If not, continue.

Step 2 – Check Sensor Light When a primer is in front of the sensor: The yellow light should turn OFF. If the light stays ON even when a primer is in front of it: The sensor may be too far back or may have failed. If the light never turns ON at all: Check that the sensor wires are fully inserted in the control board terminals. Tighten if needed. Test again. If the light still does not respond correctly, the proximity sensor may need replacement.

Step 3 – Check Control Board Connection If the sensor light turns OFF correctly but the bowl continues running: Inspect the sensor wiring at the control board. Confirm wires are fully seated in the correct terminals. Retighten and test again. If the issue continues after all checks: Stop and contact Gross Engineering for support.

10.3 Primers Jamming at the Top (Input Ramp)

If primers are binding at the top ramp or not falling cleanly:

Step 1 – Check Drop Funnel Alignment Visually inspect the drop funnel and top ramp. The funnel must align directly with the top ramp. If misaligned: Loosen the mounting fasteners slightly. Shift the system for best alignment. Retighten all fasteners evenly. Test again.

Step 2 – Inspect for Debris or Damage Turn the system off. Inspect the top ramp for debris, plastic buildup, or damage. Clean as needed. Test again.

Step 3 – Primer Brand Variation Some primer brands have taller anvils or slightly different dimensions. This can cause binding at the top ramp. If alignment and cleaning do not fix the issue, contact Gross Engineering for support.

10.4 Primers Not Feeding at the Bottom Chute

If primers reach the bottom but do not feed into the primer disk:

Step 1 – Check for Chute Blockage Look through the side inspection window. Check for primers stuck inside the chute. If stuck: Lightly tap the system to see if the primer frees. If blockage continues, power off and clear the chute.

Step 2 – Check Primer Disk Alignment If primers reach the bottom but do not enter the disk: Inspect alignment of the primer disk on your machine. Make sure the disk is centered under the chute. Adjust as needed.

Step 3 – Check for Debris or Powder Powder or debris inside the chute can slow primer movement. Clean the chute and retest.

10.5 Primers Collide with Primer Pocket (Shim Missing)

If primers sit too low and collide with the primer pocket: Confirm that the Lower Base Shim is installed. The Primer Bowl Assembly must sit flush on top of the shim. There should be no gap between the assembly and the shim. If the shim is missing or misinstalled: Install it correctly and retest.

10.6 Primers Flipping Frequently

If you see frequent upside-down primers: Minor flipping can be normal. If you are seeing flipping more often than 1 in 100 to 1 in 300 primers, inspect the system.

Step 1 – Inspect the Bowl Turn the system off. Inspect the bowl and track for cracks, broken plastic, damage, debris, or loose parts. Remove any debris and test again.

Step 2 – Check Bowl Height and Tightness Make sure the Orientation Bowl is fully seated. Make sure the grub screw is tight. The bowl must sit flat on the base plate. If the bowl lifts, wobbles, or feels loose, orientation performance will be affected. Tighten and retest.

Step 3 – Inspect for Internal Binding Check for a primer stuck in the track, plastic buildup, or a loose fastener interfering with flow. Correct any issues and test again.

Step 4 – Check Primer Variation Different primer brands and lots may behave differently. If the system is mechanically sound and flipping continues: Try a different primer lot if available. If flipping continues at a high rate: Contact Gross Engineering. A replacement printed component may resolve tolerance-related issues.

10.7 Side Guide or Chute Contacting Primer Disk The side guide can be installed in more than one orientation. Only one orientation is correct. The side guide must not touch the primer disk. The lower chute must not touch the primer disk. There must be visible clearance between:

- The side guide and the primer disk
- The lower chute and the primer disk

If any part touches the primer disk: Turn the system off. Loosen the mounting fasteners. Adjust the position for proper clearance. Retighten all fasteners. Cycle the press by hand and confirm there is no contact. If binding continues, review the installation pictures in this manual or contact Gross Engineering.

Appendix A – Exploded View

Exploded View Refer to the exploded view diagram provided on the following page. The exploded view identifies major components and their relative position within the system. This diagram is intended for service reference and part identification only. Do not fully disassemble the system unless necessary. If unsure, contact Gross Engineering before disassembly.

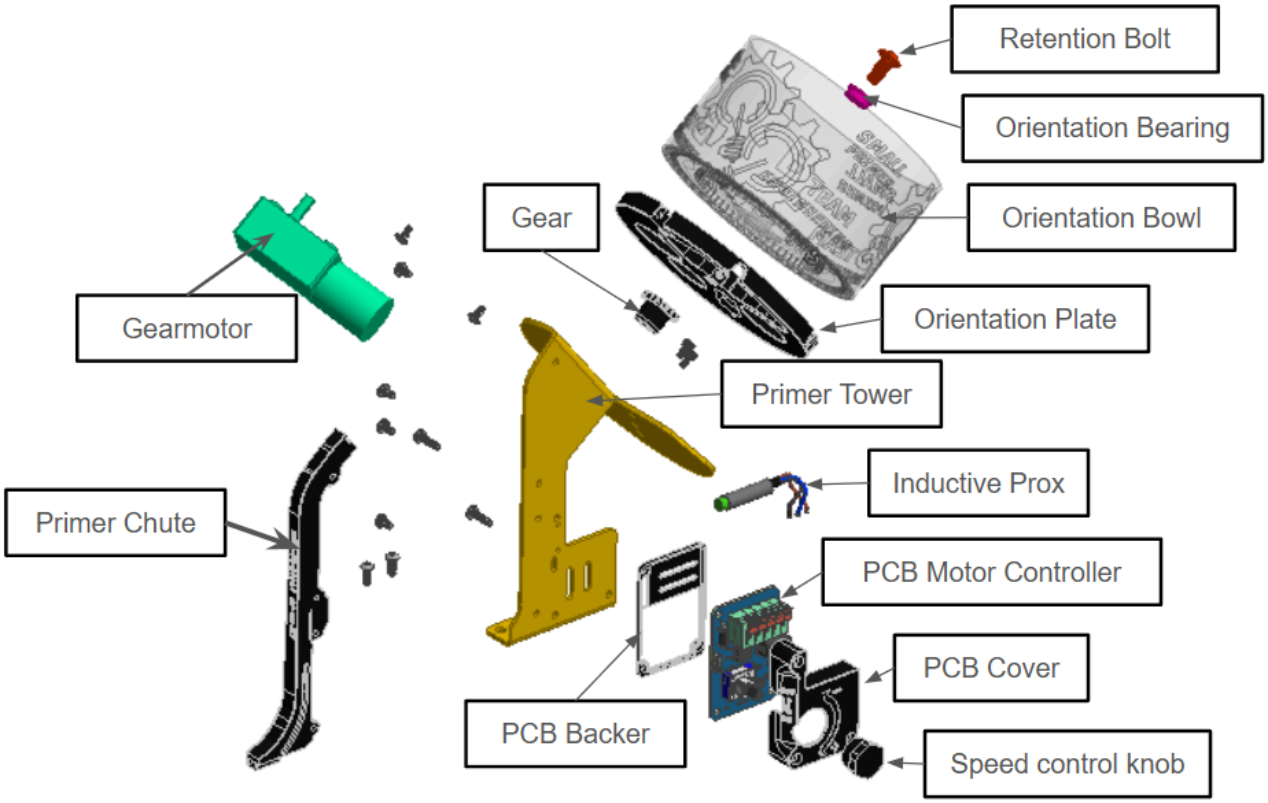

Appendix B – Components

Major Components The Primer Bowl System consists of the following primary components:

- Primer Bowl Assembly
- Orientation Bowl (primer-size specific)
- Base Plate

- Lower Base Shim
- Side Lower Shield
- Feed Track and Drop Funnel
- Inductive Proximity Sensor
- Motor and Sprocket Assembly
- Control Board
- 12V Power Supply

Replacement components may be available upon request.

Appendix C – Electrical Break Out

Electrical Specifications Input Power: 12 Volt DC Power Supply: 12V, 2 Amp switching power supply Control Type: On/Off switch with adjustable speed potentiometer Sensor Type: Inductive proximity sensor Motor Type: DC gear motor Only use the provided or approved power supply. Do not connect to unregulated or higher voltage sources.

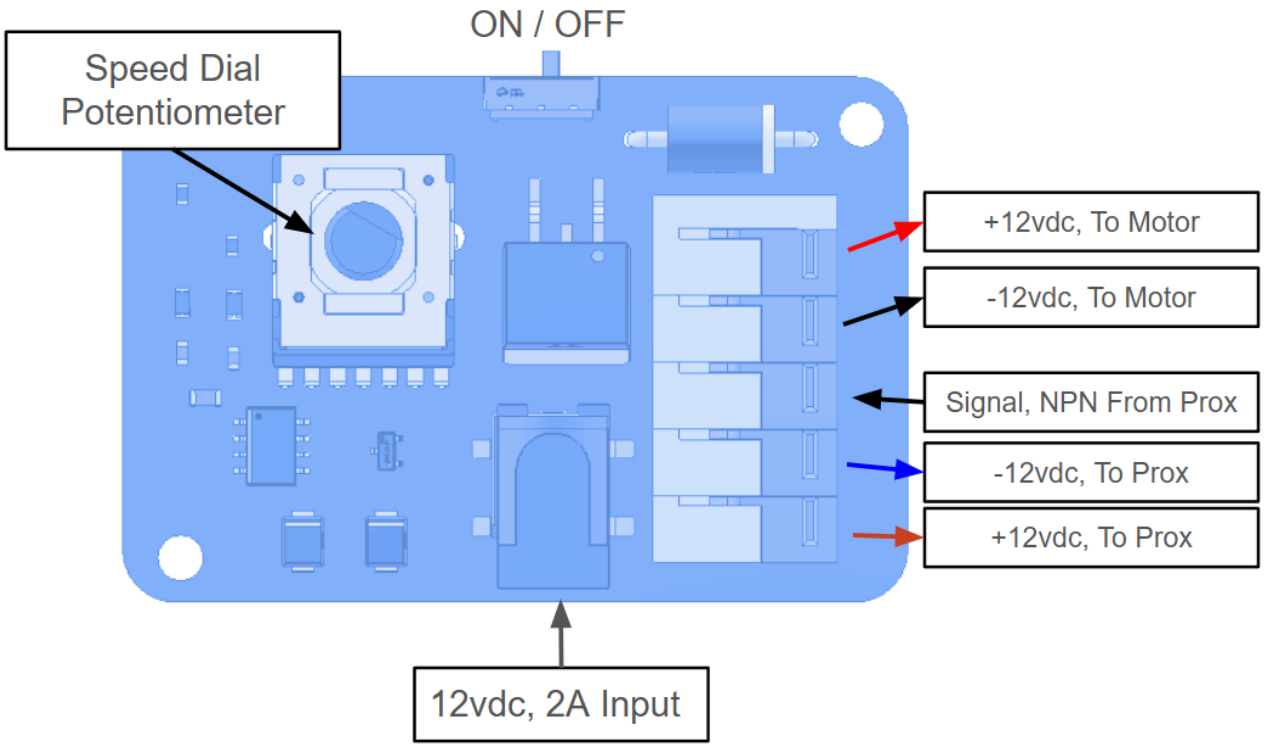

Appendix D – Support Ticket

Contact and Support For support, replacement parts, or service inquiries: Contact Gross Engineering directly by email. When requesting support, include:

- Description of the issue
- Photos if applicable
- Press model
- Primer type being used

Providing detailed information will help resolve issues quickly.