GROSS ENGINEERING LLC

Design for Today & Innovate for Tomorrow

Dillon SP1050 AutoDrive

SP1050

Quick Start Guide

Rev C

July 2026

Gross Engineering LLC · 215 Barrington Ridge Ln · Wentzville, Missouri

© Gross Engineering LLC. All rights reserved. This document contains confidential and proprietary information. Do not distribute, reproduce, or share without written permission.

Contents

1. Overview **4**
2. Important Safety Information **4**
General Safety 4
Who Should Operate This System 4
Operating Environment 5
Warnings 5
Liability Disclaimer 5
3. What's in the Box **6**
Main Components 6
Hardware 6
Shafts & Keys 6
Sensors & Brackets 6
Electronics 6
You Will Also Need (Customer-Supplied) 7
4. Before You Begin **7**
Tools Required 7
Before You Start Work 7
5. Assembly **8**
5.1 Unbox & Inspect 8
5.2 Prepare the Press & Replace the Crankshaft 8
5.3 Mount the Base Plate 9
5.5 Install the Coupler, Gearbox Shaft & Keys 9
5.6 Mount the L-Brackets and Gearbox 10
5.7 Torque the Assembly and Install the Motor 11
5.8 Assemble the Proximity Sensor Bracket & Flag 12
5.9 Install the Bullet Sensor 13
5.10 Final Assembly Check 14
6. Electrical Connection & First Power-On **15**
Control Box Ports 15
Making the Connections 15
Power-On Check 16
7. Commissioning **17**
7.1 Verify the Proximity Sensors 17
7.2 Set the Top Proximity Sensor 18
7.3 Set the Bottom Proximity Sensor 19
7.4 Learn the Stroke 20
7.5 Set the Index Position 20
7.6 Set the Primer / Controlled Seat Position 21
7.7 Set the Clutch Values 21
7.8 Stability Testing 22
7.9 Commissioning Complete 22
8. Where to Go Next **22**
9. Support **23**

1. Overview

AutoDrive is an automation system for progressive reloading presses. This configuration fits the Dillon SP1050.

Installed, AutoDrive runs the press for you. It cycles the machine, monitors sensors through the stroke, and stops on a fault. A NEMA 34 stepper motor and worm gearbox drive the press from a base plate mounted underneath. Proximity sensors track tool head position at the top and bottom of the stroke. A standalone touchscreen module handles all setup, tuning, and operation.

Reversible installation: AutoDrive installs using existing hardware positions; nothing is drilled or cut. The one part change is the press crankshaft, which is replaced with the supplied GE crankshaft. Keep your OEM crankshaft — the press can be returned to its original manual configuration by reversing this installation.

With AutoDrive installed, the press cannot be run by hand. All operation goes through the touchscreen. Manual handle operation requires removing AutoDrive.

What this guide covers – Mechanical assembly and first power-on — from an unopened box to a machine that is assembled, wired, and powering up.

What it does not cover — Touchscreen setup, sensor calibration, stroke and index learning, tuning, normal operation, and software updates each have their own document. Section 8 points you to the right one.

⚠ **Read Section 2 before you begin —** This system can move suddenly and with significant force. The safety information in Section 2 is not optional reading.

2. Important Safety Information

Read this section in full before unpacking or installing the system.

General Safety

This system is a powerful mechanical device capable of sudden, forceful movement. Automation increases speed and consistency, but it also increases the consequences of a mistake. It does not make reloading inherently safer.

Who Should Operate This System

This system is intended only for responsible adults who will:

- Stay focused and present while the machine is running.
- Stop the system immediately if anything looks, sounds, or feels wrong.
- Use sound judgment during installation, adjustment, and operation.

⚠ **Do not operate —** Do not operate this system if you are distracted, impaired, fatigued, or unsure how the machine works.

Operating Environment

- Never allow children or untrained individuals to operate the system, or to be near it while it is powered.
- Always assume the machine can move whenever power is applied.
- If you are unsure about any step, stop and reassess before continuing.

Warnings

⚠ **Moving parts —** Unexpected motion, pinch points, rotating components, and stored energy can cause severe injury or damage. Keep hands, tools, clothing, and loose items clear of all moving components at all times.

⚠ **Never run unattended —** Never operate the system unattended. Never bypass guards, safety devices, or emergency stop functions.

Liability Disclaimer

AutoDrive is manufactured by Gross Engineering LLC. Gross Engineering LLC does not manufacture, design, or supply the reloading press to which AutoDrive is installed. The press is a separate product from a separate manufacturer, and its design, construction, guarding, and safety features are the responsibility of that manufacturer.

AutoDrive automates the motion of the press. It does not alter the reloading process itself. The hazards inherent to reloading ammunition — including primer detonation, powder ignition, case failure, and the handling of energetic materials — exist independently of AutoDrive and are present whether the press is operated manually or under automation. Gross Engineering LLC assumes no liability for these hazards.

AutoDrive has been designed and constructed in line with current industrial wiring and machine safety practice, to the best of our engineering ability.

Guarding and pinch points. The press has moving components, including tool head travel, that may not be guarded by the press manufacturer. AutoDrive does not add guarding to the press and does not eliminate these hazards. Automation can make them more consequential: an automated press moves without a hand on the handle, and it may move at any time power is applied. It is your responsibility to identify pinch points on your press, keep clear of them during operation, and provide any additional guarding your installation requires.

By installing and using AutoDrive, you acknowledge that you are solely responsible for its safe installation, setup, adjustment, and operation, and that you assume all associated risks.

Gross Engineering LLC is not liable for injury, death, or property damage resulting from: the design or condition of the press; misuse; improper installation; unsafe operation; bypassing safety features; ignoring warnings; user modifications; third-party components; or unsupported configurations.

3. What's in the Box

Unpack all items and check them against the lists below before you begin. Contact us immediately if anything is missing or damaged.

Main Components

- (1) Aluminum base plate, 12″ × 8″
- (1) Worm gearbox (1:20)
- (2) L-shaped mounting brackets
- (1) SP1050 replacement crankshaft

Hardware

- (4) M6 × 16 flange bolts (black oxide)
- (4) M6 × 20 flange bolts
- (4) M6 × 25 socket head cap screws (black oxide) — motor to gearbox
- (8) M6 ny-loc nuts
- (4) M6 × 40 socket head cap screws (blue) — press to base plate
- (4) M6 washers
- (1) M8 bolt — proximity bracket to base plate

Shafts & Keys

- (3) Small keys
- (1) Large keys
- (1) M18 keyed shaft
- (1) M18 to M18 clamping shaft

Sensors & Brackets

- (1) Proximity bracket (sheet metal)
- (2) M12 inductive proximity sensors
- (1) 1050 flag
- (1) Laser / IR bullet sensor with bracket

Electronics

- (1) NEMA 34 stepper motor (keyway included, packaged in the red bag)
- (1) Touchscreen HMI assembly
- (1) 9-pin D-sub cable
- (1) Control box
- (1) AC power cable

You Will Also Need (Customer-Supplied)

- A Dillon SP1050 press, mounted and accessible from all sides
- Metric hex key set covering M6 and M8 socket hardware
- Wrench or socket set for the press mounting bolts
- A soft-faced mallet, for seating keys
- The wrenches required to remove your press's factory crankshaft, per Dillon's instructions
- (1) Micro usb programming cable (Firmware Update)
- (1) Micro 32gb SD card (HMI Updates)

4. Before You Begin

Tools Required

Tool	Used For
Metric hex key set	M6 and M8 socket head hardware
Wrench or socket set	Press mounting bolts and ny-loc nuts
Soft-faced mallet	Lightly seating keys into keyways
Small flat screwdriver	Screw-terminal connections in the control box
Dillon crankshaft / toolhead tools	Removing the crankshaft, toolhead return spring, and ratchet mechanism

Before You Start Work

- Disconnect power from the press and from the control box.
- Clear enough bench space to lay out parts in groups.
- Set aside a container for parts you remove from the press. Some will be reinstalled and some will not.

Leave fasteners loose until told otherwise — Several steps in Section 5 instruct you to leave bolts loose. This is intentional. The gearbox self-aligns to the press when everything is snug but not tightened, and tightening early will cause binding.

5. Assembly

Work through these subsections in order. Do not skip ahead — alignment in later steps depends on fasteners left loose in earlier ones.

5.1 Unbox & Inspect

1. Remove all items from the packaging and sort them into the groups listed in Section 3.
2. Inspect every component for shipping damage.
3. If anything is damaged or missing, stop and contact Gross Engineering before continuing.

5.2 Prepare the Press & Replace the Crankshaft

> ***Keep the press bolted to your bench for now*** — Complete the removals below (toolhead, return spring, ratchet) and the crankshaft swap while the press is still firmly mounted to your bench. These parts are far easier to break loose with the press held solid. Only unbolt the press from the bench once these steps are done and you are ready to mount it to the base plate in Section 5.3.

1. Remove the toolhead.
2. Remove or modify the toolhead return spring (see figure).
3. Remove the tool-head ratchet mechanism and toolhead section
4. Lower the press piston fully to the bottom of its stroke.
5. Unbolt and remove the factory (OEM) crankshaft (Per Dillon's instructions).
6. Transfer the key from the OEM shaft onto the GE SP1050 replacement crankshaft, insert the new crankshaft, and install the bearing cap. A lite tap from a rubber/plastic hammer may be required to full seat the shaft.
7. Install Bearing retention cap and bolt.
8. Store your OEM crankshaft — Keep the removed Dillon crankshaft in a zip-lock bag with a desiccant pack, or wrapped in paper towel, to prevent corrosion, damage, or loss. You will reuse the key from the OEM shaft on the GE replacement shaft.



Figure 5.2a — Toolhead return spring, and ratchet removal

5.3 Mount the Base Plate

9. Position the base plate so the non-threaded hole faces the front of the press.

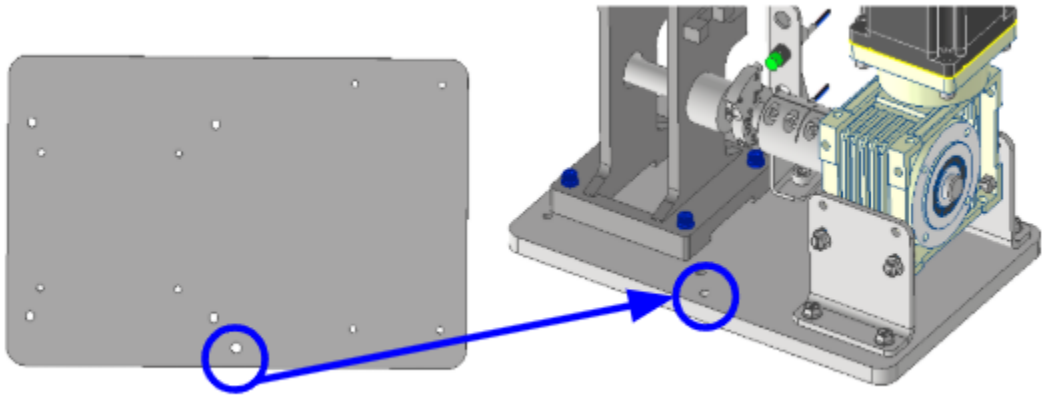

Figure 5.3a — Base plate orientation, non-threaded hole to the front

10. Place the press atop the plate and align with the holes in the base plate.
11. Install four M6 washers and four M6 × 40 screws (Blue Zinc Coated). Leave them loose.

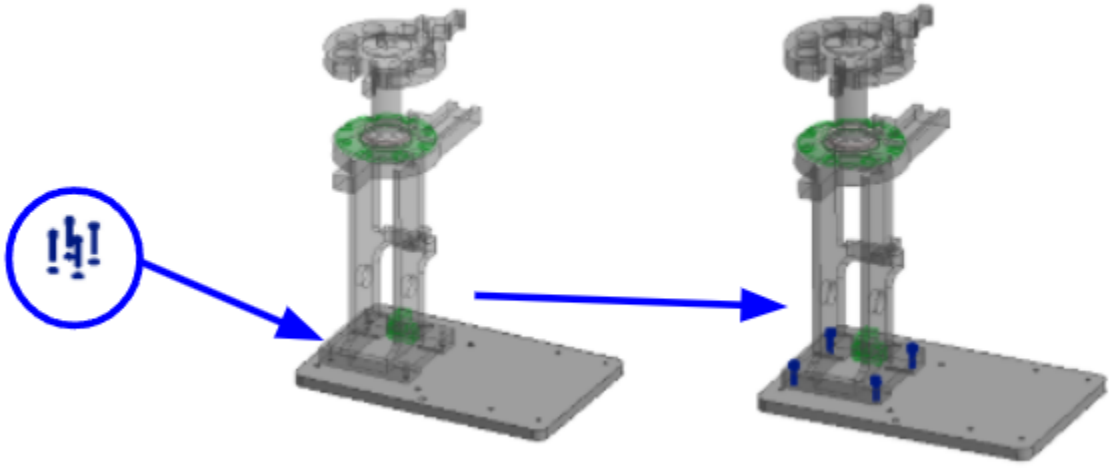

Figure 5.3b — Press aligned to base plate, M6 hardware installed loose

5.5 Install the Coupler, Gearbox Shaft & Keys

1. Install the M18-to-M18 shaft coupler with a 6 mm key. Tighten the press side of the coupler.
2. Install the M18 gearbox shaft with its 6 mm key into the coupler and tighten.

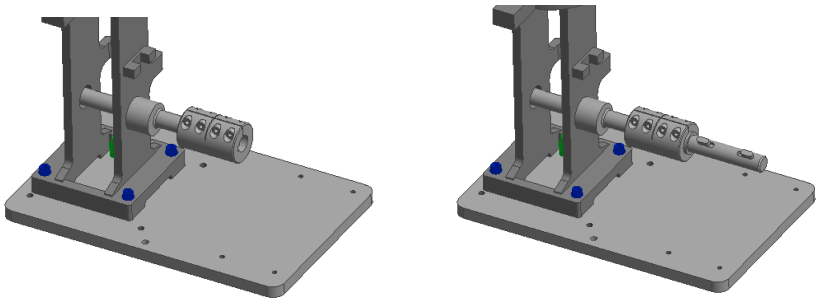

Figure 5.5a — Coupler and gearbox shaft installed

3. Place both small keys into the gearbox shaft. Tap them lightly into place if needed — do not force them.

> **Keep track of your keys —** Loose keys are easy to lose and the machine will not drive without them. Keep any key you are not actively installing in a container.

5.6 Mount the L-Brackets and Gearbox

1. Align both L-shaped brackets as shown.
2. Install four M6 × 20 flange bolts in the holes shown and secure them with four ny-loc nuts. Leave them loose.

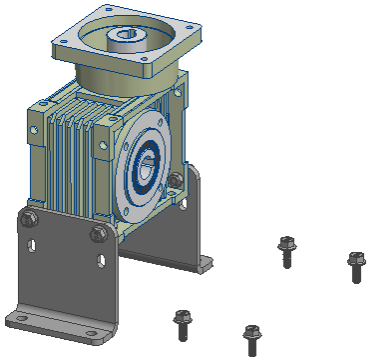

Figure 5.6a — L-bracket alignment and M6 × 20 flange bolt positions

3. Rotate the gearbox input shaft — until its keyway lines up with the keys on the press shaft. Do not move the gearbox body to achieve this.
4. Slide the gearbox onto the shaft.
5. Align the L-bracket mounting holes with the base plate. Loosen the gearbox mounts if you need more movement to get there.
6. Install the M6 × 16 flange bolts through the L-brackets into the base plate.

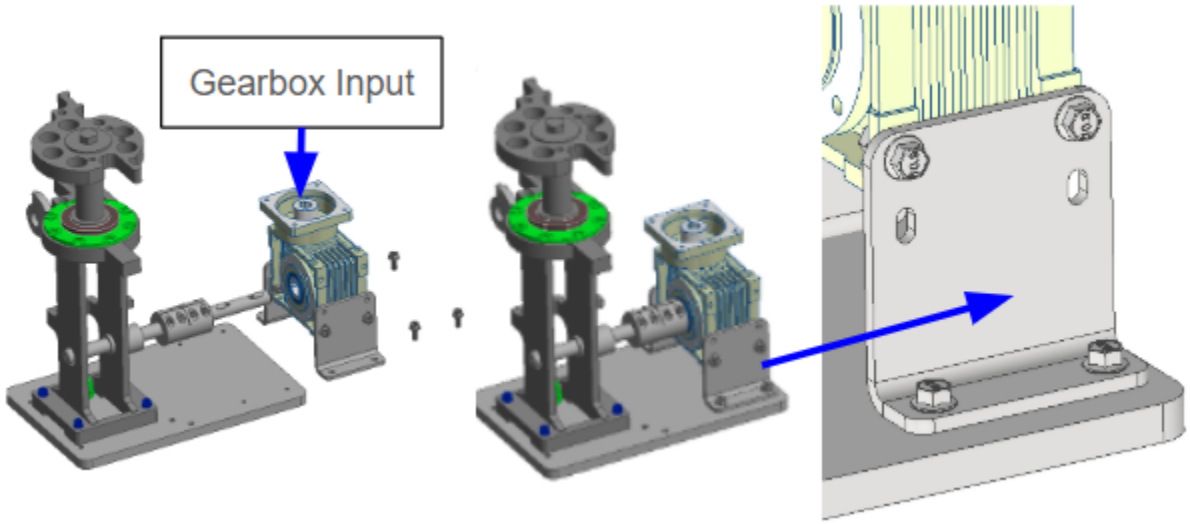

Figure 5.6b — Gearbox mounted to the L-brackets and base plate

⚠ **Everything stays loose — All gearbox and mount bolts must remain loose at the end of this subsection. The gearbox self-aligns to the press when you torque the assembly in Section 5.7. Tightening now will cause binding.**

5.7 Torque the Assembly and Install the Motor

Everything is now positioned. This subsection locks it down. Tighten in the order listed.

1. Confirm all components are aligned as shown before tightening anything.
2. Tighten the four M6 × 40 bolts holding the press to the base plate.
3. Tighten the four clamping collar bolts.
4. Tighten the L-brackets to the base plate.
5. Tighten the gearbox to the L-brackets.

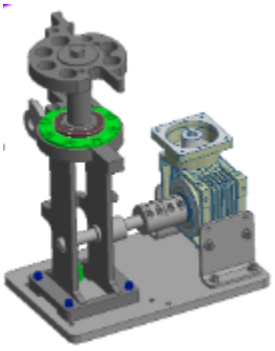

Figure 5.7a — Fully aligned assembly, ready to torque

⚠ **If you meet resistance —** If anything binds or resists as you tighten, stop. Loosen the fasteners, realign, and try again. Forcing a misaligned assembly will damage the gearbox or the press.

6. Align the motor shaft key with the gearbox keyway and insert the motor into the gearbox.

7. Install four M6 × 30 bolts and secure them with four ny-loc nuts. Tighten until snug.

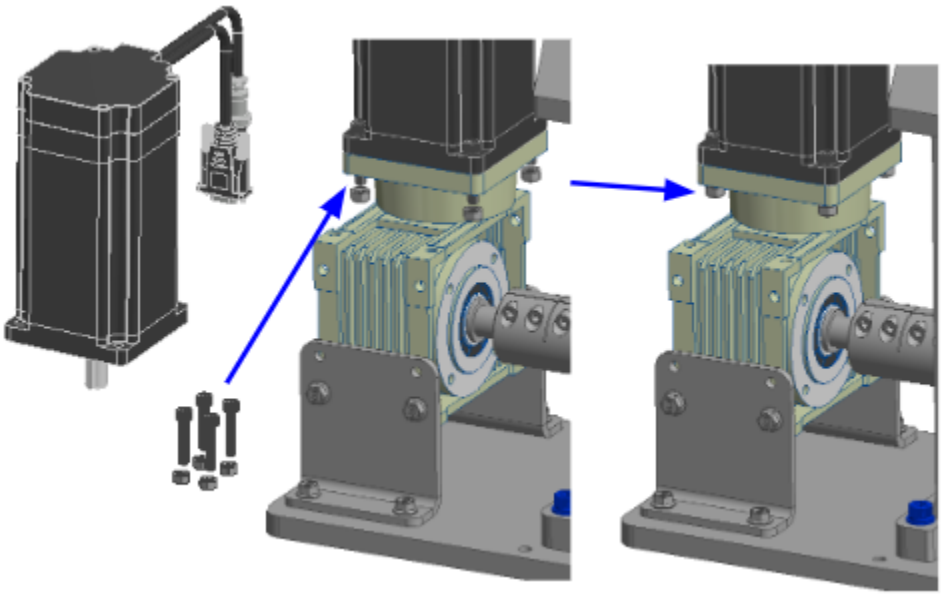

Figure 5.7b — NEMA 34 stepper motor installed into the gearbox

5.8 Assemble the Proximity Sensor Bracket & Flag

1. Assemble the proximity flag as shown.
2. Install the two M12 inductive proximity sensors into the bracket and secure them with the supplied M12 nuts. The proxy will be installed into second, and fourth from the top mounting position for the SP1050.

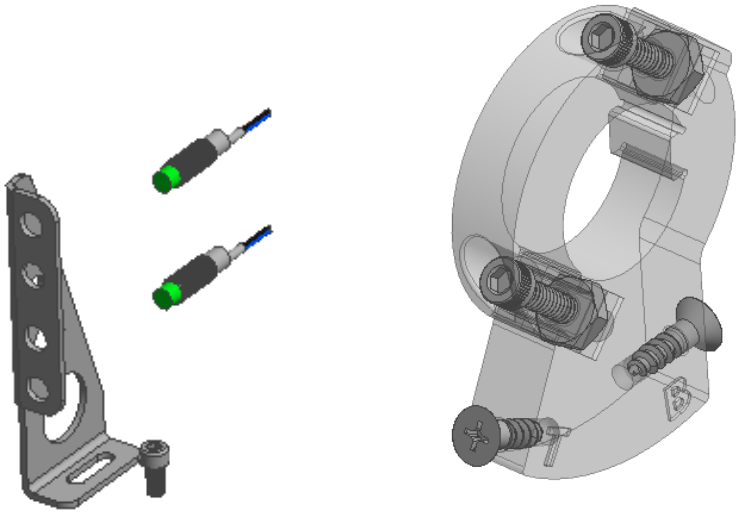

Figure 5.8a — Proximity flag assembly and M12 sensor installation

3. Install the prox flags clamping collar and tighten it. Make sure the “T” and “B” markings face outward so you can read them.

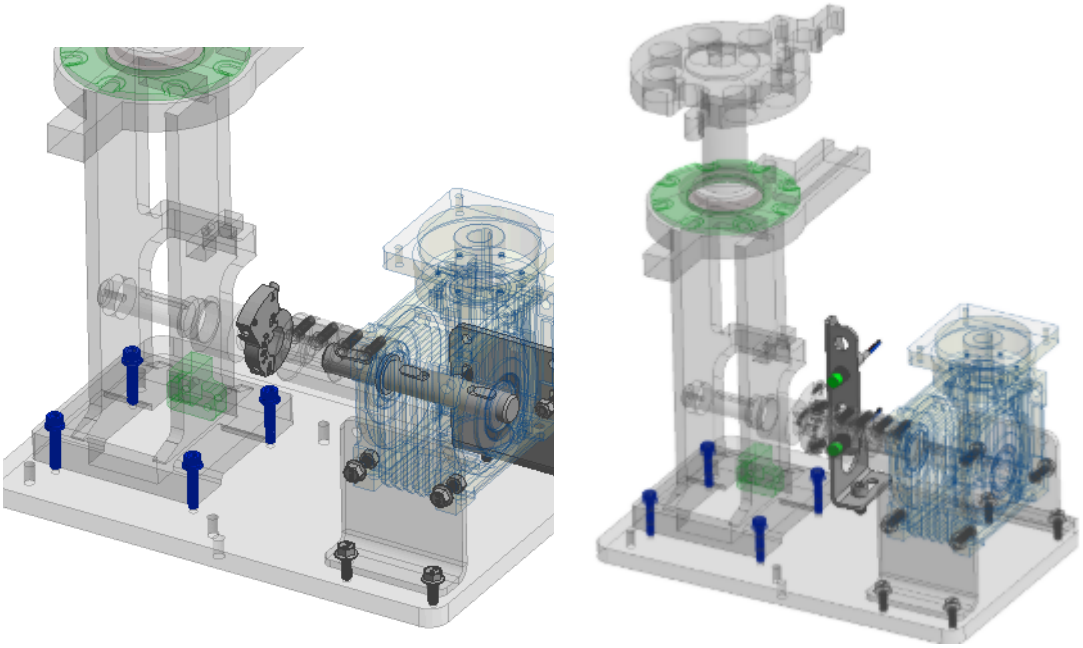

Figure 5.8b — Flag installed on keyed shaft, T and B markings facing outward

Micro-adjustment — The bracket slides in and out to fine-tune sensor position. Leave it where it lands for now — final position is set during touchscreen commissioning, not during assembly.

5.9 Install the Bullet Sensor

1. Mount the bullet sensor bracket to the base frame, off the post, then tighten and secure it.
2. Lower the sensor until its indicator light turns on. (Laser is not visible)
3. Confirm the sensor is aligned as shown, with both sensor eyes in a horizontal orientation.

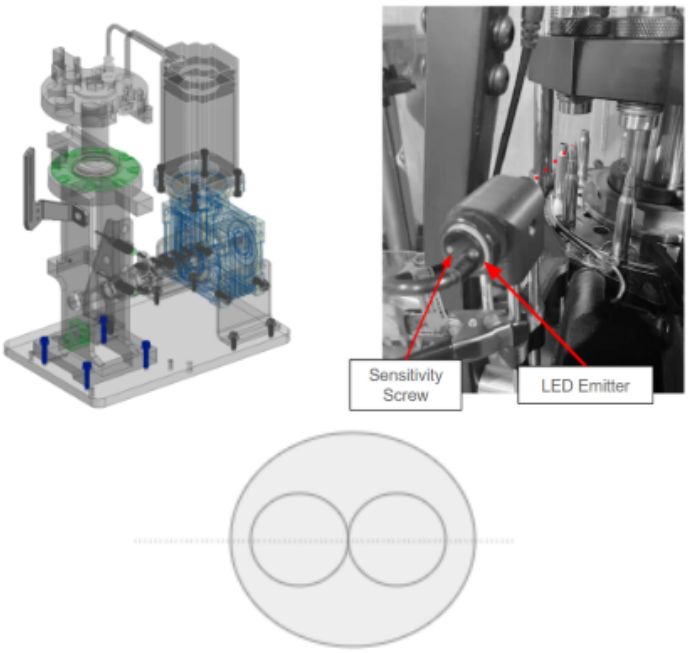

Figure 5.9a — Bullet sensor bracket mounting and alignment

5.10 Final Assembly Check

Before applying power, work through this checklist.

1. Compare your assembly against the figure below.
2. Confirm every bolt and fastener is fully tightened.
3. Confirm every bolt and fastener is fully tightened and the assembly matches the reference image.

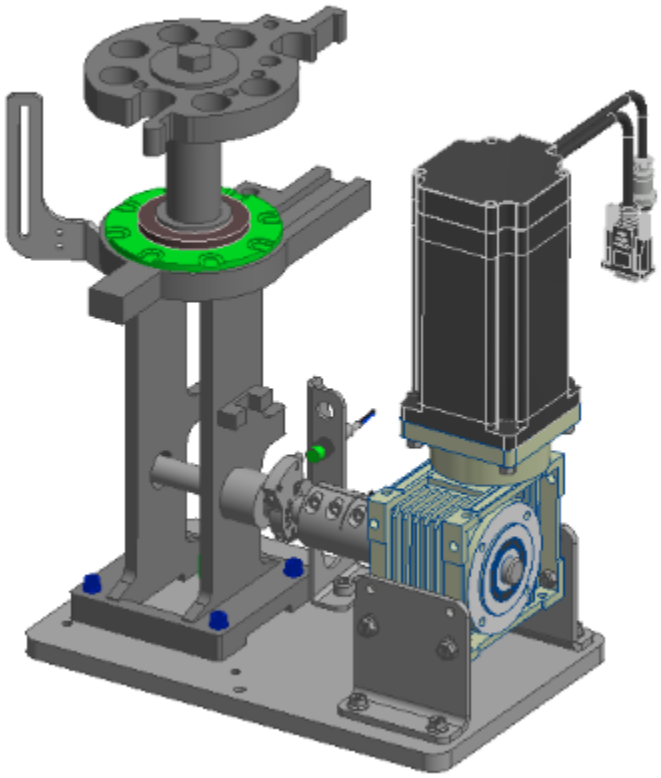

Figure 5.10a — Completed assembly

Assembly complete — This concludes the mechanical assembly. Proceed to Section 6 for electrical connection.

6. Electrical Connection & First Power-On

All connections are made at the control box. Each connector is a different size or pin count, so they cannot be interchanged.

Control Box Ports

Port	Connects To
HMI input	Touchscreen, via the 9-pin D-sub cable
110 / 220 V input	AC power cable
Sensor inputs A–D	Bullet sensor and any additional sensors
Proximity input 1	Bottom proximity sensor
Proximity input 2	Top proximity sensor

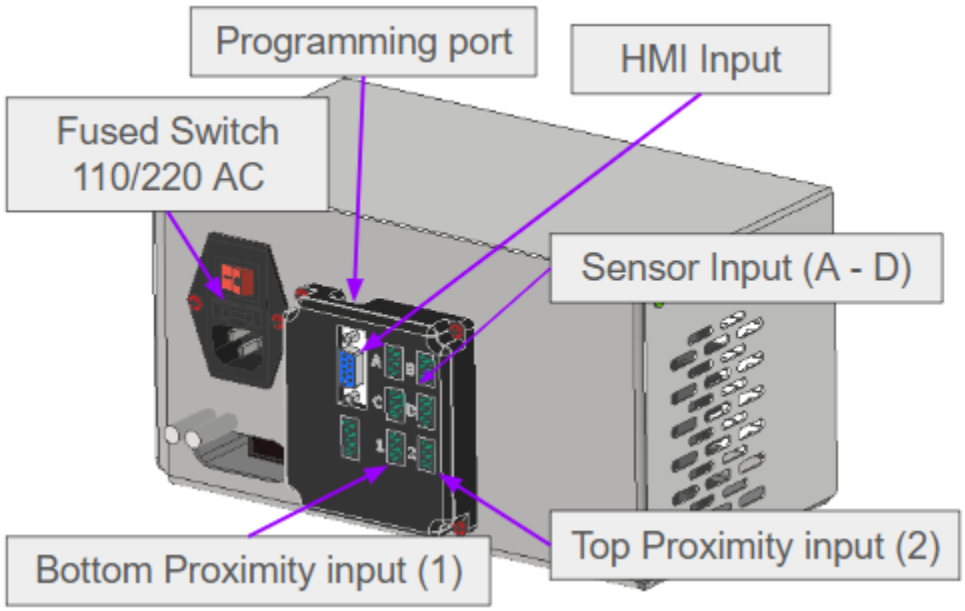

Figure 6a — Control box port layout

Making the Connections

⚠ **Power off first —** Confirm the AC power cable is unplugged before making any connection.

1. Connect the 15-pin encoder cable from the stepper motor to the control box.
2. Connect the 4-pin power cable from the motor to the control box.
3. Connect the bottom proximity sensor to Port 1.
4. Connect the top proximity sensor to Port 2.
5. Connect the 9-pin D-sub cable from the touchscreen to the control box.

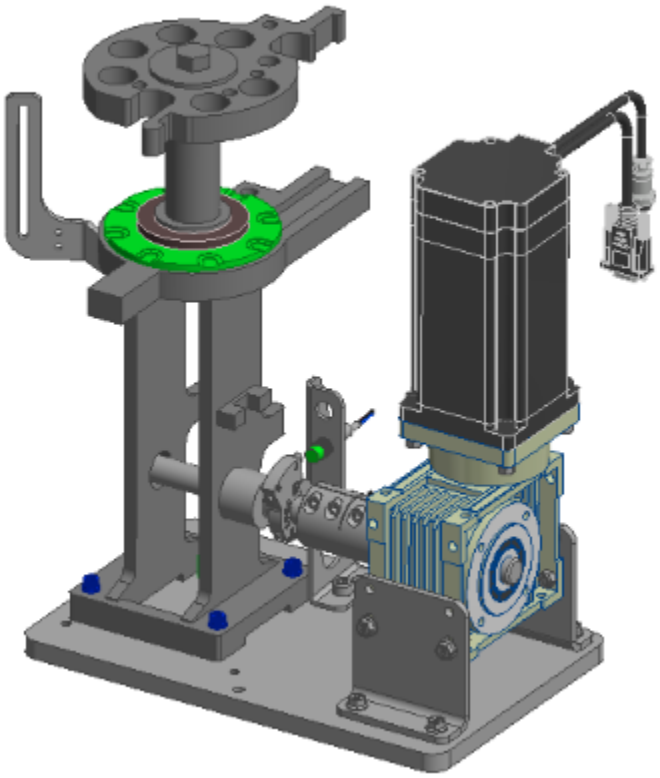

Figure 6b — Completed wiring

Power-On Check

1. Confirm your hands, tools, and any loose items are clear of the press.
2. Plug in the AC power cable and turn on the machine.
3. Confirm the touchscreen illuminates and the system reaches its home screen.

⚠ **If the system does not power up —** Turn the machine off, unplug it, and confirm every connector is fully seated. If the touchscreen still does not illuminate, contact Gross Engineering support before continuing.

7. Commissioning

Your machine is assembled and powered, but it does not yet know where the press begins and ends. This section teaches it. Work through the subsections in order — each one depends on the one before it.

Set aside about an hour the first time. The proximity sensors in particular usually take several attempts to get consistent, and that is normal.

⚠ **The press will move during this section —** You are jogging the machine from the touchscreen while working near it physically. Know where your hands are before every jog, and keep the E-Stop within reach.

7.1 Verify the Proximity Sensors

Before setting sensor positions, confirm the top and bottom proximity sensors are plugged into the correct ports. A swapped pair will appear to work during jogging but will fail during a stroke.

From the main menu, press **Sensor Menu**, then **Prox Set** at the bottom of the page to open the Prox Setup & Debug screen. Each sensor has a live indicator that reads **Detected** or **Not Detected** — hold a screwdriver in front of the top sensor and confirm the top indicator responds, then repeat for the bottom. Press the **Back Arrow** when you are done.

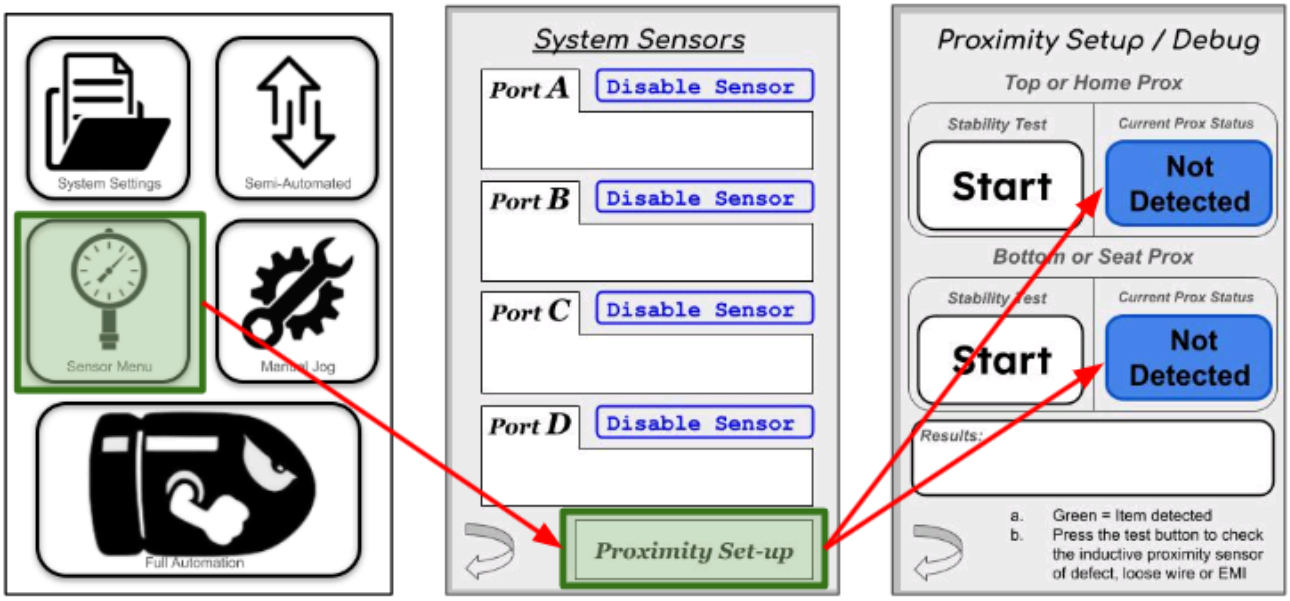

[Figure 7.1a — Sensor page showing proximity sensor verification]

⚠ **If the wrong indicator responds —** If triggering the top sensor lights the bottom indicator, or the reverse, the two sensors are plugged into swapped ports. Power off the machine and exchange the two proximity connectors on the control box, then repeat this check

Stability test — Press Start on this screen to run a stability test on both proximity sensors. Use it after making adjustments, or any time you are chasing inconsistent behavior.

7.2 Set the Top Proximity Sensor

The top sensor tells the machine where the top of the stroke is. Getting it right is what makes the shell plate index clean.

1. From the main menu, press Manual Jog.
2. Jog the press **up**, using the largest step size until you are close to the top, then a smaller step for the final approach.
3. Watch the shell plate as you go. Confirm it indexes fully. You may need to back out the hard stop screw to ensure full travel.
4. Slide the top proximity sensor toward the flag until its indicator light (rear facing) shuts off.
5. Jog down using the largest step until the press is clear of the sensor and index is reset.
6. Press Top Home. The press moves up to the sensor and stops.
7. Watch the indexing. Repeat steps 4 through 6 until it is clean and consistent.

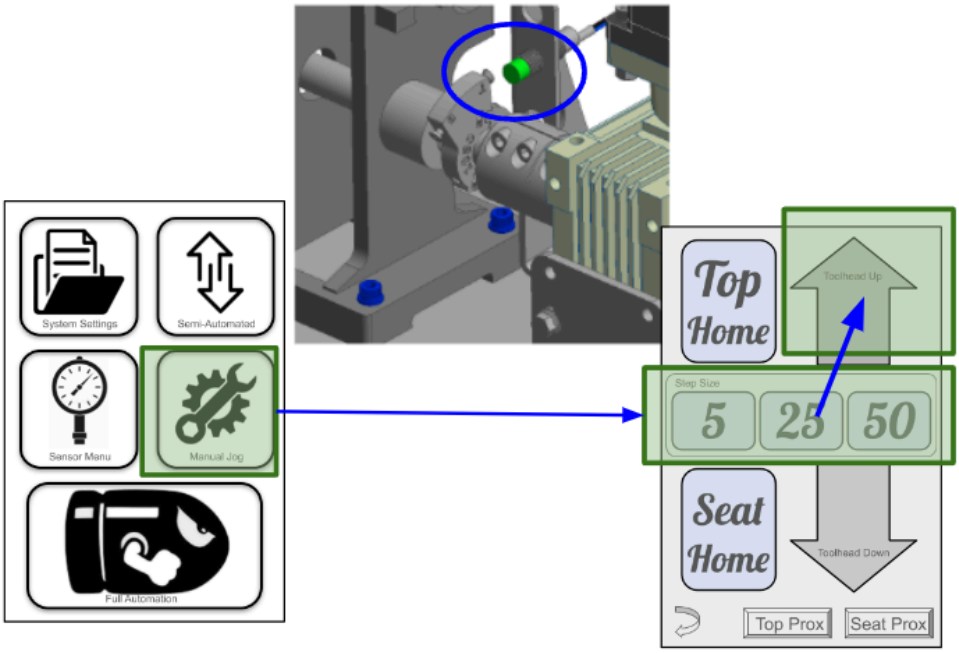

[Figure 7.2a — Manual Jog screen and top proximity sensor position]

Use the micro-adjustment screws for fine tuning — Once the sensor is close, stop moving the bracket and use the micro-adjustment screws on the proximity flag instead. They give you far finer control over the top position than sliding the bracket does.

⚠ If the shell plate does not index fully — Adjust the micro-adjustment screw on the proximity flag backwards until it does. Do not adjust the indexing pawl on your Dillon press first — the flag is the correct adjustment point, and changing the pawl to compensate will affect manual operation as well. You are looking for the shell plate to align perfectly at the index. Repeat until it does.

Expect several attempts — Consistent indexing usually takes more than one adjustment. Small sensor movements produce large changes at the shell plate.

7.3 Set the Bottom Proximity Sensor

The bottom sensor sets the seating depth of the stroke. This one is dimensional — you are setting a specific gap, not eyeballing it.

1. From the Manual Jog screen, jog the press down. Start with the largest step size and reduce as you approach.
2. Stop when the gap measures 0.0625″ to 0.125″, measured from the lower hard stop.
3. Move the bottom proximity sensor inward until its indicator light turns off.
4. For fine adjustment, turn the sensor body on its threads.
5. Jog up until the press is clear of the sensor.
6. Press Seat Home. The press moves down to the sensor and stops.
7. Repeat until the stop position is consistent.

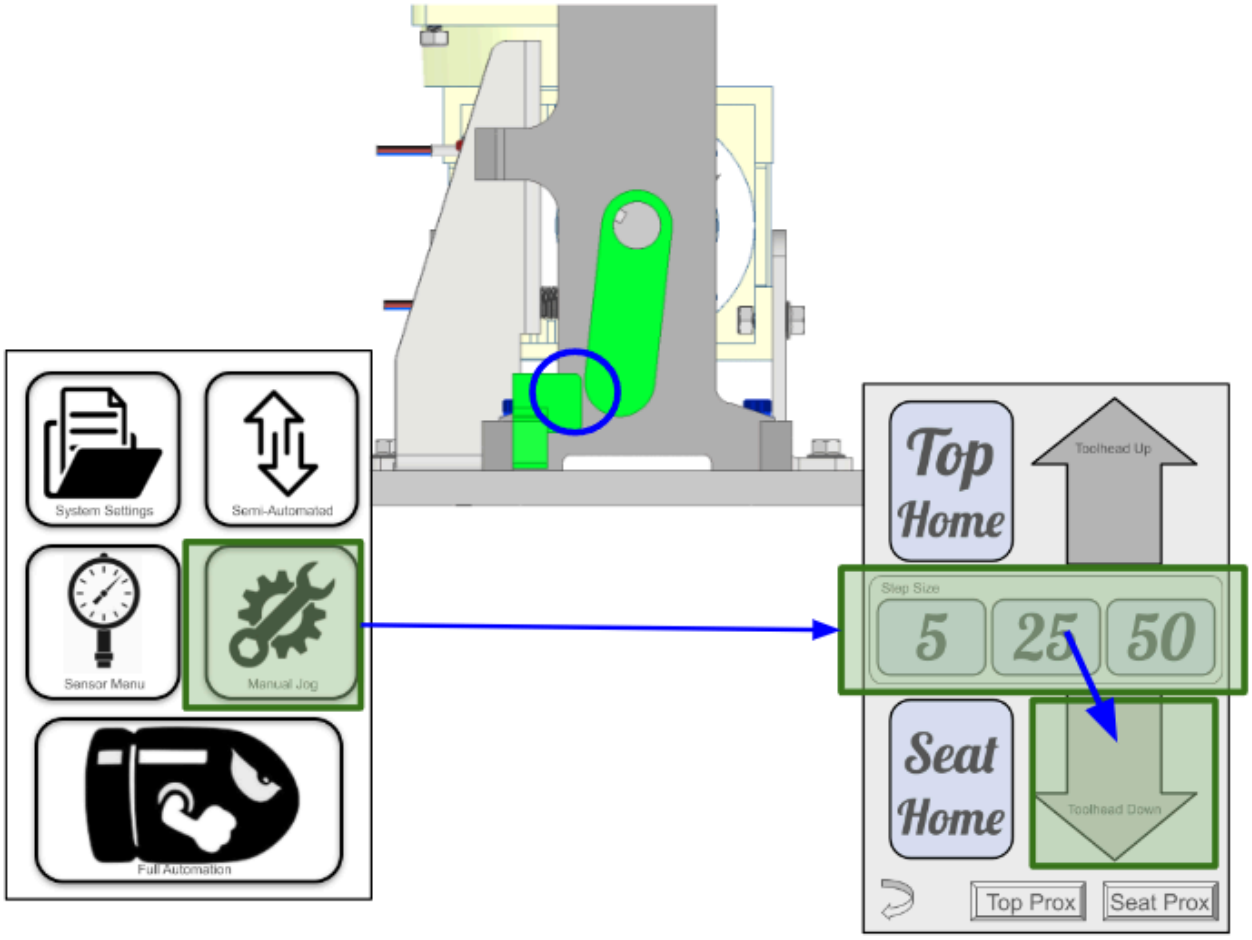

[Figure 7.3a — Setting the bottom proximity sensor and measuring the gap]

7.4 Learn the Stroke

With both sensors set, the machine can measure its own travel.

> ⚠ **Empty the press first —** Remove all cases before learning the stroke.

1. From the main menu, go to Settings → Stroke Text Box.
2. Press the stroke text box to begin learning.
3. The press moves to the top position, travels down to the bottom to measure the stroke, then returns to the top to confirm it. The learned value will populate the text box.
4. The stroke is saved automatically.

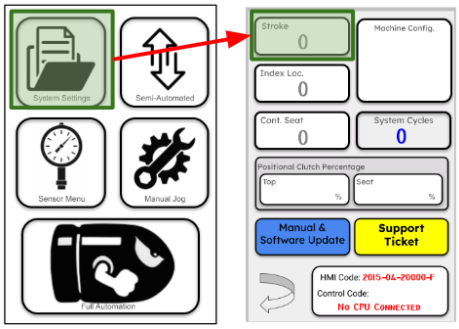

[Figure 7.4a — Settings menu and Stroke Setup screen]

> **When to relearn —** Only if you move a proximity sensor. Routine operation does not require relearning.

7.5 Set the Index Position

This is where the shell plate advances during the cycle.

1. Go to Settings → Press “Index Loc” the screen moves to the Manual Jog screen.
2. Jog up or down, reducing step size as you close in, until you reach the point where indexing should occur. Listen for the audible click of the index paw reset.
3. Press “Terminate Run” to exit learning if you wish to abort the learning.
4. Press Seat Home. The press cycles and returns to the position you set and settings menu.
5. Repeat until the position is right.

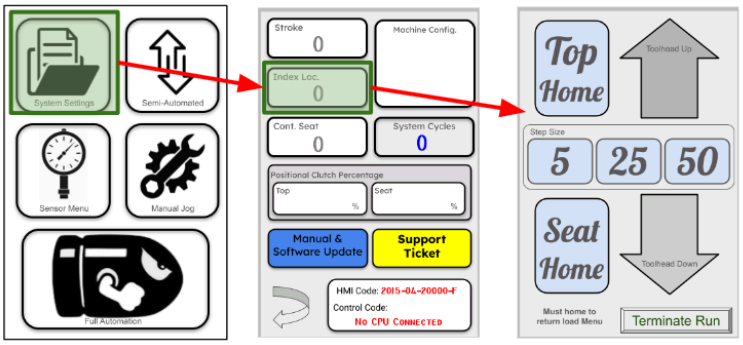

[Figure 7.5a — Index Set screen]

This one does not need to be exact — Set indexing where you want it to happen. There is a workable range, not a single correct value.

7.6 Set the Primer / Controlled Seat Position

This is where primer insertion begins.

1. Go to Settings → Press Cont. Seat text box, the screen will progress to the manual jog menu..
2. Jog to the point where primer insertion should begin. This can sit slightly before or slightly after contact — choose what works for your setup. You can also make the larger or small depending on your preference.
3. Press “Terminate Run” to exit learning if you wish to abort the learning.
4. Press the Seat Home button. The press cycles and returns to the position you set.
5. Repeat until the position is right.

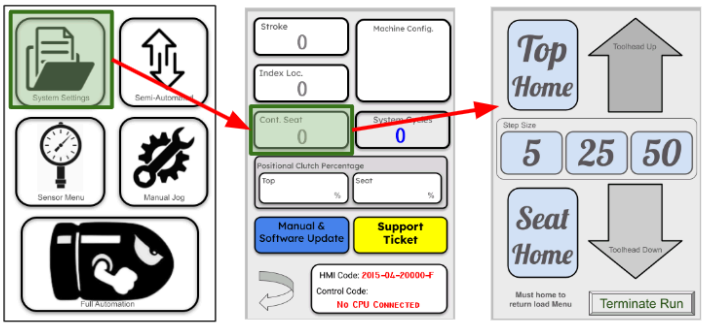

[Figure 7.6a — Primer / Seat Set screen]

7.7 Set the Clutch Values

The clutch is the machine’s jam protection. It defines how far out of position the press may drift before the system stops.

1. Go to Settings → Clutch Setup text box.
2. Select the Top value and enter a whole number on the keypad. Start at 15. Note, if a value is greater than 100, it will be converted to a percentage of the learned stroke.
3. Repeat for the Bottom value.
4. Values will be saved automatically

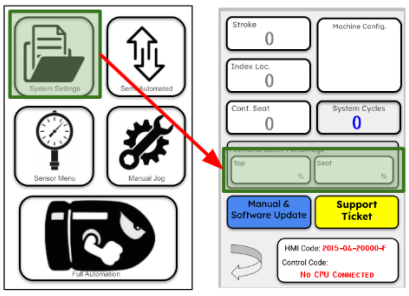

[Figure 7.7a — Clutch Setup screen and keypad entry]

How the number behaves:

Direction	Effect
Lower value	Tighter. Less movement allowed before the system stops.
Higher value	More forgiving. More movement allowed before the system stops.

What the clutch does not do — The clutch value is a percentage of allowed motion against the learned stroke. It does not add or reduce motor torque. A higher value lets the machine struggle longer before stopping; it does not make it stronger. The press will never drive past the proximity sensors regardless of clutch setting — those remain a hard stop.

⚠ **If every value reads 0, including the stroke —** The touchscreen is not communicating with the control box. Power cycle the machine. If the values are still 0 after a restart, contact Gross Engineering before continuing.

7.8 Stability Testing

With every position set, run the machine through a series of test cycles to confirm the settings hold under repeated motion. Settings that look correct on a single stroke can drift once the machine runs continuously.

7.9 Commissioning Complete

Your machine now knows its stroke, its index point, its seat point, and its fault thresholds, and has been proven stable under repeated cycles. It is ready for die setup and load development.

8. Where to Go Next

Your system is now assembled, wired, and powering up. It is not yet calibrated and is not ready to load. Continue with the documents below in this order.

Next Step	Document
Configure and use sensors, run the machine in semi-automatic or automatic mode, and recover from errors	AutoDrive Operation Manual
Set up your tool head, install and adjust dies, and develop a load	In-Work
Update controller or touchscreen software	Autodrive Software Update Guide

You do not need to read everything — Use only the sections that apply to your setup. The Interface Guide commissioning section is the one document every new installation needs.

9. Support

If you get stuck at any point in this guide, contact us before proceeding. We would rather answer a question than repair a machine.

Email — n.gross@gro-eng.com

Software, manuals, and release notes — https://github.com/BteamEngineering/AutoDrive/releases

© Gross Engineering LLC. All rights reserved. This document contains confidential and proprietary information. Do not distribute, reproduce, or share without written permission.